SINTLY

SINTLY | ALTERNATOR
XTLALT0114

VOLTAGE **12** V

OUTPUT CURRENT **150** A

APPLICATIONS For DACIA, NISSAN, RENAULT

DIMENSIONS

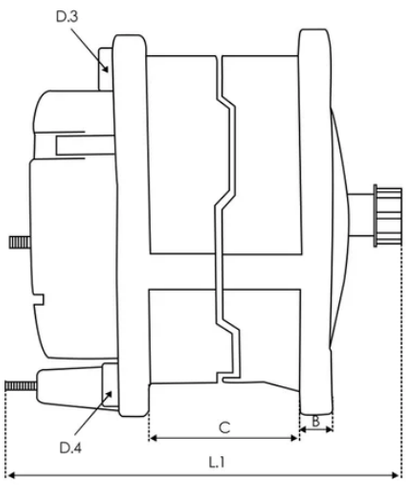

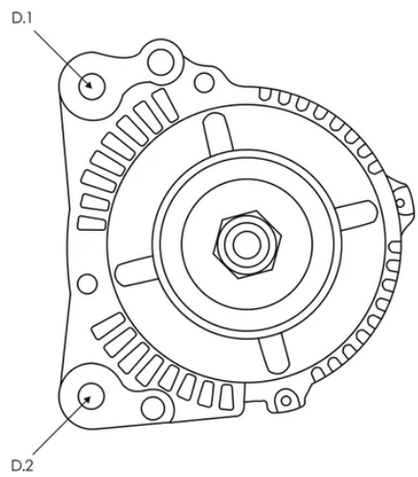

PL_2401

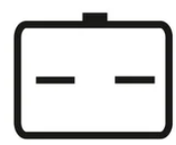

L DFM

L	Lamp
DFM	Feedback

B **14.00 mm** C **61.00 mm** D.1 **8.50 mm** D.2 **8.50 mm** D.3 **M8x1.25 mm** D.4 **M8x1.25 mm** L.1 **176.00 mm**

Números OE

BOSCH	0124525082 0124525140 0124525140-R 0124525208 0124525277 0124525540 0986080400 1986A00903 F000BL08FF
Other	0124525082 0124525140 23100-0000M 23884

Código equivalente

AS-PL	A0168
A.Z. MEISTERTEILE	AZMT-49-035-1675 AZMT-49-035-1673
ACAUTO	AC-CBA1876
AINDE	28-5501CT 28-6867CT AI-90097
ALANKO	10443189
ANDEL	ANM32324 ANM32324X
ATL AUTOTECHNIK	L82480
AUTOELECTRO	AEC1876
AUTOTEAM	ABO235 ABO235A
BORG & BECK	BBA2519
BTS TURBO	G100618 G101028 G106325
CARGO	114354 F032114354
CASCO	CAL10235AS CAL10235GS CAL10235RS
CEVAM	4679
DRI	2303111502

DTS	A-10330
EAI	57144
ELECTROLOG	ALT1907
ELSTOCK	28-5501
ERA	209028 209028A 209028R
EUROREPAR	1648232280
FARCOM	112611
FRIESEN	9090556
GHIBAUDI	AG0120 AG0120RB
GPARTS	GA525082-A GA525082B-R SA525082-A SA525082B-R
HELLA	8EL012429-451 8EL738211-271
HENKEL PARTS	3122383 3122384 3122385
HERTH+BUSS	J5111130
HOFFER	H5510013 H5510013G
IAP QUALITY PARTS	802-13113
IKA	6.8155.1

ITAB AUTOMOTIVE	20010235AV 20010235OV
KRAUF	ALB1876
KUHNER	301876RI 301876RIK 301876RIS
LE PART	LEA0689
LOGISTIK	441462
LUCAS	LRA02884 LRA2884
MAGNETI MARELLI	063731435410 063731876010 MQA14354 MQA1876
MEAT & DORIA	5510013 5510013G
MEC-DIESEL	432880M
MOTRIO	8550505359 8550505615 8550511646
NIPPARTS	N5111117
NISSAN	23100-00Q0M 23100-00Q2J 23100-00Q2JEX 23100-JD10A 23100-4HH3ACX
NK	4839793
NPS	N511N59
POWERMAX	89213047

PROTECH	IR6691
PSH	575.589.150.010 575.589.150.211 575.589.150.216 575.589.150.280 575.589.150.340 575.589.150.460 575.589.150.461 A133.922 A147.527
QUINTON HAZELL	QRA2771
REAL	20101532BN 20101532OE 20101532RC
REMANTE	011-003-000699R
RENAULT	7711368355 8200390667 8200728292 8200992211
RIDEX	4G0426 4G0426R
ROLLCO	ALT214CP
SANDO	2010235.0 2010235.1 2010235.2
SIDAT	A12BH0293 A12BH0293A2
SIOM	ALT122350 ALT122350A ALT122350R
SNRA	TR8215
STARDAX	STX100815
STARK	SKGN-0320426

STARTCAR	144ST75
TESLA	TT11307 TT11307PRO
THE NEW LINE	RE73669N
TMI	AL02561
VALEO	200245 440689 443281
WAI / TRANSPO	23884N
WILMINK GROUP	WG2010978 WG2196779 WG2280998 WG2282945 WG2471836
WOODAUTO	ALT10330 WOOALT10330
HC PARTS	CA1876IR
7 SEVEN PARTS	SV37BH0293.0
APEC	AAL1194
NAPA	NPANAL1194
AIRSTAL	20-0190
AP XENERGY	XAL23510AD
CARWOOD GROUP	BREF0320986080400 BREF032114354 BREF0321986A00903

COMLINE	CAL0550
DA SILVA	011905 JA011905 MAQ0341
EUROTEC	12090183
FRANKBERG	5481FB0032354
GOCORE	GCD0386
JAPANPARTS	AL-139JM
KAMOKA	8620464
KAVO PARTS	EAL-6521
MTR	13047919
TESLA TECHNICS	TT11307
THE NEWLINE	RE73669N
TRISCAN	831010104
TURBO-TEC	TTAL001138
WAI	23884N 575.589.150.010 575.589.150.211 575.589.150.216 575.589.150.280 575.589.150.340 575.589.150.440 575.589.150.460 575.589.150.461 A133.922 A147.527
WALKER	WAL00165

Aplicaciones

NISSAN

NOTE (E11, NE11)

1.5 dCi 09/2010-06/2012

1.5 dCi 09/2010-06/2012

1.5 dCi 03/2006-06/2012

1.5 dCi 03/2006-06/2012

1.5 dCi 03/2006-06/2012

1.5 dCi 07/2008-06/2012

NV200 Van

1.5 dCi 110 (M20, M20N, M20M) 04/2011

1.5 dCi 110 (M20, M20N, M20M) 04/2011

1.5 dCi 105 (M20N) 07/2010-10/2013

1.5 dCi 90 (M20, M20N, M20M) 04/2011

1.5 dCi 85 (M20, M20N, M20M) 02/2010

1.5 dCi 85 (M20, M20N, M20M) 02/2010

1.5 dCi 85 (M20, M20N, M20M) 02/2010

NV200 / EVALIA Bus

1.5 dCi 110 (M20, M20M) 04/2011

1.5 dCi 110 (M20, M20M) 04/2011

1.5 dCi 90 (M20, M20M) 04/2011

1.5 dCi 85 (M20, M20M, M20K, M20KK) 07/2010

1.5 dCi 85 (M20, M20M, M20K, M20KK) 07/2010

1.5 dCi 85 (M20, M20M, M20K, M20KK) 07/2010

QASHQAI I (J10, NJ10)

1.5 dCi 01/2010-12/2013

1.5 dCi 11/2006-11/2013

1.5 dCi 11/2006-11/2013 1.5 dCi 08/2008-01/2010

1.5 dCi 08/2008-01/2010

CUBE (Z12)

1.5 dCi 03/2010 1.5 dCi 03/2010 1.5 dCi 10/2009 1.5 dCi 10/2009

JUKE (F15)

1.5 dCi 06/2010-12/2019 1.5 dCi 06/2010-12/2019

1.5 dCi 06/2010-12/2019 1.5 dCi 06/2010-12/2019

TIIDA Hatchback (C11)

1.5 dCi 03/2007-06/2013 1.5 dCi 09/2007-12/2011

1.5 dCi 09/2007-12/2011

QASHQAI I VAN (J10)

1.5 dCi 03/2013-04/2014

JUKE Van (F15)

dCi 06/2010-12/2019

TIIDA Saloon (SC11)

1.5 dCi 09/2007-12/2012 1.5 dCi 09/2007-12/2012

MICRA III (K12)

1.5 dCi 09/2003-06/2010 1.5 dCi 01/2003-06/2010

1.5 dCi 06/2005-06/2010 1.5 dCi 06/2005-06/2010

QASHQAI +2 VAN (JJ10E)

1.5 dCi 03/2013-11/2013

QASHQAI +2 (JJ10E)

1.5 dCi 08/2008-11/2013 1.5 dCi 08/2008-11/2013

1.5 dCi 08/2008-01/2010 1.5 dCi 08/2008-01/2010

1.5 dCi 02/2010-11/2013

RENAULT

MEGANE II Estate (KM0/1_)

1.6 16V 05/2005-07/2009 1.5 dCi (KM16, KM1E) 05/2005-06/2008

1.6 16V Hi-Flex 02/2008-07/2009 1.5 dCi (KM16) 01/2007-07/2009

1.5 dCi (KM02, KM13) 02/2004-03/2006 1.6 08/2003-07/2009

1.4 08/2003-07/2009 1.5 dCi (KM02, KM13) 02/2004-03/2006

1.6 08/2003-07/2009 1.4 08/2003-07/2009 1.5 dCi (KM1F) 05/2005-07/2009

1.5 dCi (KM0F, KM0T, KM2B) 08/2003-05/2006 1.6 16V 01/2006-08/2009

1.6 16V 05/2005-07/2009 1.6 16V 01/2006-08/2009

1.6 16V 01/2006-08/2009 1.6 16V 01/2006-08/2009

CLIO III Hatchback Van (SB_, SR_)

1.5 dCi 06/2005-07/2010 1.5 dCi 10/2005-07/2010

1.5 dCi 10/2005-10/2007 1.5 dCi 10/2005-10/2007

CLIO III (BR0/1, CR0/1)

1.5 dCi (BR0H, CR0H, CR1S, BR1S) 06/2005-12/2014

1.5 dCi (BR0H, CR0H, CR1S, BR1S) 06/2005-12/2014

1.5 dCi (BR17, CR17) 06/2005-12/2012 1.5 dCi (BR1C, CR1C) 06/2005-12/2012

MEGANE II Saloon (LM0/1_)

1.5 dCi (LM1E) 05/2005-12/2010 1.6 09/2003 1.4 09/2003

1.5 dCi (LM1F) 05/2005-12/2010

1.5 dCi (LM02, LM13, LM2A) 02/2004-12/2010

1.5 dCi (LM0F, LM0T, LM2B) 08/2003-12/2010

1.4 09/2003

1.4 09/2003

1.5 dCi (LM02, LM13, LM2A) 02/2004-12/2010

1.6 09/2003

1.6 16V (LM1R, LM0C) 01/2006

1.6 16V (LM1R, LM0C) 01/2006

1.5 dCi (LM16) 10/2003-12/2010

1.6 16V (LM1R, LM0C) 01/2006

1.6 16V (LM1R, LM0C) 01/2006

MEGANE II (BM0/1_, CM0/1_)

1.5 dCi (BM1E, CM1E) 05/2005-06/2008

1.4 16V (BM0B, CM0B) 11/2002-02/2008

1.5 dCi (BM1F, CM1F) 05/2005-02/2008

1.6 16V (BM0C, CM0C) 11/2002-02/2008

1.5 dCi (BM02, BM13, BM2A, CM02, CM13) 10/2003-02/2008

1.5 dCi (BM0F, BM0T, BM2B, CM0F, CM0T) 09/2002-02/2008

1.5 dCi (BM02, BM13, BM2A, CM02, CM13) 10/2003-02/2008

1.4 16V 10/2003-02/2008

1.4 16V (BM0B, CM0B) 11/2002-02/2008

1.5 dCi (BM16, CM16) 01/2007-03/2009

1.6 Bifuel 06/2005-02/2008

LOGAN I (LS_)

1.6 (LS0L, LS09, LS0V, LS0P, LS18, LS1S, LS1V, LS1Y,... 04/2007-10/2013

1.6 (LS0L, LS09, LS0V, LS0P, LS18, LS1S, LS1V, LS1Y,... 04/2007-10/2013

1.6 (LS0L, LS09, LS0V, LS0P, LS18, LS1S, LS1V, LS1Y,... 04/2007-10/2013

1.6 (LS0L, LS09, LS0V, LS0P, LS18, LS1S, LS1V, LS1Y,... 04/2007-10/2013

1.6 (LS0L, LS09, LS0V, LS0P, LS18, LS1S, LS1V, LS1Y,... 04/2007-10/2013

LOGAN I Estate (KS_)

1.6 (KS0L, KS0M, KS0P, KS1S) 04/2007

1.6 (KS0L, KS0M, KS0P, KS1S) 04/2007

1.6 (KS0L, KS0M, KS0P, KS1S) 04/2007

MEGANE II Coupé-Cabriolet (EM0/1_)

1.5 dCi (EM16) 01/2007-06/2009 1.5 dCi (EM1E) 03/2006-01/2009

MEGANE II Estate Van (KM_)

1.5 dCi (KM1E) 08/2003-07/2009 1.5 dCi (KM1F) 05/2005-07/2009

1.5 dCi (KM0F) 08/2003-07/2009 1.5 dCi (KM02) 08/2003-07/2009

MEGANE II Hatchback Van (KM0/2_)

1.5 dCi 05/2005-02/2008 1.5 dCi 01/2007-03/2009

1.5 dCi 04/2005-02/2008 1.5 dCi 08/2003-02/2008

1.5 dCi 08/2003-02/2008

KANGOO Express (FC0/1_)

1.5 dCi 10/2005 1.5 dCi (FC07, FC1R) 12/2001

1.5 dCi (FC07, FC1R) 12/2001 1.5 dCi (FC07, FC1R) 12/2001

1.5 dCi (FC1G) 06/2005 1.5 dCi (FC08, FC09) 04/2003

1.5 dCi (FC08, FC09) 04/2003 1.5 dCi (FC1R) 12/2002

1.5 dCi (FC1E) 06/2005

KANGOO (KC0/1_)

1.5 dCi (KC07) 12/2001 1.5 dCi (KC07) 12/2001 1.5 dCi 06/2005

1.5 dCi (KC08, KC09) 07/2002 1.5 dCi 06/2005

1.5 dCi (KC08, KC09) 07/2002

SCÉNIC II (JM0/1_)

1.5 dCi (JM0F) 06/2003-05/2006 1.4 (JM0B, JM0H, JM1A) 06/2003-11/2008

1.4 (JM0B, JM0H, JM1A) 06/2003-11/2008

1.5 dCi (JM02, JM13) 11/2003-08/2005 1.5 dCi (JM1E, JM16) 05/2005-11/2008

1.4 (JM0B, JM0H, JM1A) 06/2003-11/2008

1.5 dCi (JM02, JM13) 11/2003-08/2005 1.5 dCi (JM1F) 05/2005-11/2008

1.5 dCi (JM1E, JM16) 05/2005-11/2008 1.5 dCi (JM16) 01/2007-11/2008

1.5 dCi (JM16) 01/2007-11/2008

GRAND SCÉNIC II (JM0/1_)

1.5 dCi (JM02, JM13) 04/2004-11/2008 1.5 dCi (JM1E) 05/2005-01/2009

1.5 dCi 06/2006-11/2008

CLIO II Hatchback Van (SB0/1/2_)

1.5 dCi (SB07) 06/2001 1.5 dCi (SB07) 06/2001 1.5 dCi 06/2001-10/2004

DACIA

LOGAN MCV (KS_)

1.6 16V (KS0L, KS0M, KS0P, KS1S) 02/2007

1.6 16V (KS0L, KS0M, KS0P, KS1S) 02/2007

1.6 16V (KS0L, KS0M, KS0P, KS1S) 02/2007 1.6 16V Hi-Flex 11/2009

LOGAN II

1.6 16V 01/2013

DUSTER (HS_)

1.6 16V LPG 04/2011-01/2018 1.6 16V LPG 04/2011-01/2018

1.6 16V Hi-Flex 08/2010-01/2018 1.6 16V 04/2010-01/2018

1.6 16V 04/2010-01/2018 1.6 16V 04/2010-01/2018

1.6 16V 4x4 06/2010-01/2018 1.6 16V 04/2010-01/2018

1.6 16V 04/2010-01/2018

SANDERO

1.6 16V Bifuel 01/2011 1.6 16V Bifuel 01/2011 1.6 16V Bifuel 01/2011

1.6 16V 07/2011 1.6 16V 07/2011

LOGAN (LS_)

1.6 16V (LS09, LS0L, LS0M, LS0P, LS0V, LS18, LS1S, LS1V,... 02/2006

1.6 16V (LS09, LS0L, LS0M, LS0P, LS0V, LS18, LS1S, LS1V,... 02/2006

1.6 16V (LS09, LS0L, LS0M, LS0P, LS0V, LS18, LS1S, LS1V,... 02/2006

1.6 16V (LS09, LS0L, LS0M, LS0P, LS0V, LS18, LS1S, LS1V,... 02/2006

1.6 16V (LS09, LS0L, LS0M, LS0P, LS0V, LS18, LS1S, LS1V,... 02/2006

1.6 16V Flexifuel 07/2010

DUSTER SUV Van

1.6 16V Hi-Flex 04/2011 1.6 16V 4x4 04/2011 1.6 16V 04/2011

1.6 16V 04/2011 1.6 16V 04/2011 1.6 16V 04/2011 1.6 16V 04/2011

LOGAN Pickup (US_)

1.6 16V (US1Y) 01/2010-08/2013