SINTLY

SINTLY | ALTERNATOR

XTLALT5017

VOLTAGE 12 V

OUTPUT CURRENT 100 A

APPLICATIONS For CHEVROLET, ISUZU, OPEL, VAUXHALL

DIMENSIONS

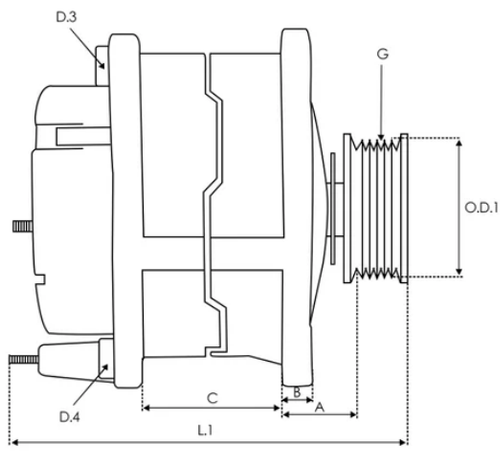

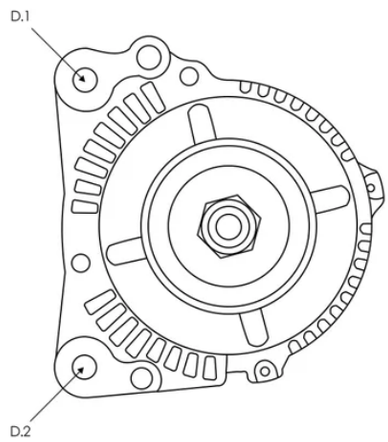

PL_9104

D+

D+ Lamp

A 51.00 mm B 33.50 mm C 59.00 mm G 6 qty. O.D.1 49.00 mm D.1 M8x1.25 mm D.2 10.50 mm D.3 10.00 mm L.1 182.00 mm

Números OE

DELCO	10479384 10479923 10480222 10480384 3493409 3493823 3493824 3493923 3493927 384 409 823 824 923 947 DRA3479 DRA3479N DRA3804 DRA9240 RAA14589
Other	1-2171-010R 10479923 10480222 13943 24439411

Código equivalente

ASHIKA	002-988
BOSCH	0123505002 0124415008 0986039240 0986043680 0986043683 0986045270
MAGNETI MARELLI	063533479 063533479010 943356554 MAN2801 MAR959
WAI / TRANSPO	1-2171-01DR 13943N 8239N
LAUBER	11.1053
ISKRA / LETRIKA	11.209.020 11.209.407 AAK5513 AAK5535 IA9020
CARGO	111426 F032111426
PRESTOLITE	20110166 20130206 35214830 35214930
SANDO	2012100 2012100.0
REAL	20133001BN 20133001OE
ERA	210065 210165
OPEL	10480409 1204108 1204121 1204145 1204146 1204154 24439410 302004028 6204000 6204002 6204003 6204008 6204063 6204133 6204145 6204151 6204152 6204196 90356665 90356897 90413760 90443929 90443930 90443931

	90540890 90542981 90566565 9201491 92059984 93175788 93175815 93175816 93175963 93175964 93177834 93181383 93183436 93603241 9512501 9512800 95520882 QX6M4 R1530052
VALEO	2542273 436683 439427 746003 SG10B012 SG10B041
ELSTOCK	28-1871
JAPKO	2988
KUHNER	301045RI 301053RI 301053RID 301053RIR
RHIAG	310608 311320
HERTH+BUSS	32001240 32039240
CEVAM	4443
EAI	56581
ISUZU	8104799230
POWERMAX	89213508 9213508
HELLA	8EL011710-071 8EL737003-001
FRIESEN	9043680
AS-PL	A1001 UD20703A

AUTOELECTRO	AEA1296
JAPANPARTS	AL-988
SIOM	ALT121980 ALT122160 ALT4850
WOODAUTO	ALT20202
3EFFE	ALTL206 ALTL206D ALTL206NE ALTL206R PRAL206 PRAL206D
STARLINE	AX 1088
HC PARTS	CA1053IR
CASCO	CAL12100 CAL12100AS CAL12100ES CAL12100GS CAL12100OS CAL12100RS
AINDE	CGB-13479
GPARTS	GA479923-A
LUCAS	LEA0172 LRA01020 LRA1020 LRB00196 LRB196
MAHLE	MG 495
RNL	RNL196
SOVEREIGN	SA651
ELECTROLOG	ALT00762 ALT1429 ALT2038 ALT2314

	ALT79808
LOGISTIK	441200
SIDAT	A12DR1148A2
ANDEL	ANM35699X
BOVEZ	STA0052R
VAUXHALL	93278385 R1530001 R1530053 R3493823
AUTO MAGNETO	AM-3302U
DAF	1516405R 1516408R
STARDAX	STX100062 STX100062R STX100078 STX100166 STX100166R STX100243 STX100243R STX100463 STX102209
PSH	135.506.100.030 135.506.100.216 135.506.100.340 135.506.100.390 135.506.100.395 135.506.100.396 135.506.100.440 135.506.100.461 135.506.100.500 A129.736
WAI	1-2171-01DR 135.506.100.030 135.506.100.216 135.506.100.340 135.506.100.390 135.506.100.395 135.506.100.396 135.506.100.440 135.506.100.461 135.506.100.500 13943N 8239N A129.736
APEC	AAL1634

NAPA	NPANAL1634
ALANKO	10441844

Aplicaciones

OPEL

ASTRA F Estate (T92)

2.0 i 16V (F35, M35)	03/1993-01/1998	1.8 i 16V (F35, M35)	07/1994-01/1998
1.6 Si (F35, M35)	03/1992-12/1994	1.4 i (F35, M35)	09/1991-01/1998
1.8 i 16V (F35, M35)	07/1994-01/1998	1.4 i 16V (F35, M35)	02/1996-01/1998
1.6 i (F35, M35)	05/1993-07/1996	1.7 TD (F35, M35)	11/1994-01/1998
2.0 i (F35, M35)	09/1991-07/1994	1.6 i (F35, M35)	09/1991-01/1998
2.0 i 16V (F35, M35)	02/1995-01/1998	1.8 i (F35, M35)	09/1991-01/1998
1.8 i 16V (F35, M35)	06/1993-01/1998	1.4 i (F35, M35)	09/1991-01/1998
1.6 i (F35, M35)	09/1991-01/1998	1.4 Si (F35, M35)	03/1992-01/1998
1.6 i 16V (F35, M35)	08/1994-01/1998	1.4 (F35, M35)	09/1992-01/1998
1.4 (F35, M35)	09/1991-09/1993	1.6 (F35, M35)	09/1995-01/1998
1.6 (F35, M35)	09/1995-01/1998	1.8 (F35, M35)	11/1991-07/1993

ASTRA F Saloon (T92)

1.8 i 16V (F19, M19)	11/1994-09/1998	1.8 i 16V (F19, M19)	06/1993-10/1994
1.6 i (F19, M19)	05/1993-07/1996	1.8 i 16V (F19, M19)	11/1994-09/1998
1.6 Si (F19, M19)	05/1992-12/1994	1.4 i (F19, M19)	09/1991-09/1998

1.8 i (F19, M19) 03/1992-09/1998

1.4 i (F19, M19) 09/1991-09/1998

2.0 i (F19, M19) 03/1992-09/1998

1.4 Si (F19, M19) 03/1992-09/1998

1.6 i (F19, M19) 03/1992-09/1998

1.7 D (F19, M19) 07/1992-09/1998

1.7 TD (F19, M19) 11/1994-09/1998

2.0 i 16V (F19, M19) 02/1995-09/1998

1.4 i 16V (F19, M19) 02/1996-09/1998

1.8 i 16V (F19, M19) 11/1994-09/1998

1.6 i (F19, M19) 03/1992-09/1998

1.6 i 16V (F19, M19) 08/1994-09/1998

1.8 i 16V (F19, M19) 09/1995-09/1996

1.6 (F19, M19) 09/1995-09/1998

1.6 (F19, M19) 09/1995-09/1998

1.4 (F19, M19) 09/1992-09/1998

1.4 (F19, M19) 09/1991-09/1993

VECTRA A (J89)

1.6 i (F19, M19) 09/1988-11/1995

1.8 S (F19, M19) 09/1988-07/1989

2.0 i 16V 4x4 (F19, M19) 06/1994-11/1995

2.0 i (F19, M19) 09/1988-09/1992

2.0 i Turbo 4x4 (F19, M19) 06/1994-11/1995

2000/GT 16V (F19, M19) 01/1989-06/1994

1.8 i Cat (F19, M19) 03/1990-11/1995

2000 16V 4x4 (F19, M19) 01/1989-10/1990

2.0 i 4x4 (F19, M19) 08/1989-07/1992

2.0 (F19, M19) 09/1988-09/1989

2.0 i 4x4 (F19, M19) 01/1989-10/1990

1.6 i (F19, M19) 09/1988-11/1995

2.0 i (F19, M19) 09/1988-10/1990

1.6 i (F19, M19) 09/1988-11/1995

2.0 i 16V (F19, M19) 08/1992-08/1995

1.6 (F19, M19) 09/1988-05/1993

1.8 S 4x4 (F19, M19) 01/1989-07/1989

1.6 i (F19, M19) 09/1993-11/1995

2.0 i Cat (F19, M19) 09/1988-11/1995

1.6 i (F19, M19) 09/1993-11/1995

2.0 i Cat 4x4 (F19, M19) 01/1989-11/1995

2000/GT 16V Cat 4x4 (F19, M19) 02/1990-11/1995

2000/GT 16V Cat (F19, M19) 02/1990-11/1995

1.6 i (F19, M19) 09/1993-11/1995

1.8 S (F19, M19) 09/1989-10/1990

1.6 (F19, M19) 08/1992-07/1993

1.4 S (F19, M19) 09/1988-06/1992

FRONTERA A (U92)

2.2 i (54MWL4) 03/1995-10/1998

2.0 i 05/1993-08/1998

2.0 i 05/1993-08/1998

VECTRA A Hatchback (J89)

2.0 (F68, M68) 04/1988-09/1989

1.8 S (F68, M68) 09/1988-07/1989

2.0 i GT (F68, M68) 09/1988-11/1995

2.0 i (F68, M68) 09/1988-10/1990

1.8 S (F68, M68) 09/1988-07/1989

2.0 i 16V (F68, M68) 02/1989-10/1990

1.6 i Cat (F68, M68) 09/1988-11/1995

1.6 i Cat (F68, M68) 09/1988-11/1995

2.0 i 16V (F68, M68) 08/1992-08/1995

1.6 i (F68, M68) 09/1993-11/1995

1.8 i Cat (F68, M68) 03/1990-11/1995

1.6 S 09/1988-05/1993

1.8 i (F68, M68) 09/1988-10/1990

2.0 i 16V Cat (F68, M68) 02/1990-11/1995

2.0 i Cat (F68, M68) 09/1988-11/1995

1.6 i (F68, M68) 09/1993-11/1995

1.6 (F68, M68) 08/1992-07/1993

1.4 S (F68, M68) 04/1988-06/1992

CORSA B (S93)

1.6 GSI 16V (F08, F68, M68) 03/1993-09/2000

1.4 Si (F08, F68, M68) 03/1993-09/2000

1.4 i (F08, F68, M68) 03/1993-09/2000

1.6 i 16V (F08, F68, M68) 09/1994-09/2000

1.4 i (F08, F68, M68) 03/1993-09/2000

1.4 i 16V (F08, F68, M68) 09/1994-09/2000

1.4 i 16V (F08, F68, M68) 08/1997-09/2000

1.6 i 16V (F08, F68, M68) 08/1997-09/2000

1.4 (F08, F68, M68) 04/1993-08/1994

1.2 i (F08, F68, M68) 03/1993-09/2000

1.2 i (F08, F68, M68) 03/1993-09/2000

1.2 i (F08, F68, M68) 03/1993-09/2000

COMBO Box Body/MPV (71_)

1.4 07/1994-10/2001

1.4 07/1994-10/2001

1.2 07/1994-10/2001

1.4 07/1994-10/2001

1.2 07/1994-10/2001

1.4 16V 08/1999-10/2001

ASTRA F Convertible (T92)

1.8 i 16V 11/1994-03/2001

1.6 i 01/1996-03/2001

1.4 i 16V 01/1996-03/2001

1.4 Si 05/1993-03/2001

1.8 i 16V 11/1994-03/2001

2.0 i 03/1993-10/1994

1.6 i 03/1993-08/1996

ASTRA F Hatchback (T92)

2.0 GSI 16V (F08, M08, F68, M68) 09/1991-01/1998

1.8 i (F08, M08, F68, M68) 09/1991-01/1998

1.7 TD (F08, M08, F68, M68) 11/1994-01/1998

1.6 Si (F08, M08, F68, M68) 03/1992-12/1994

2.0 i (F08, M08, F68, M68) 09/1991-01/1998

1.4 i (F08, M08, F68, M68) 09/1991-01/1998

1.4 Si (F08, M08, F68, M68) 03/1992-01/1998

1.6 i (F08, M08, F68, M68) 05/1993-07/1996

1.4 i 16V (F08, M08, F68, M68) 09/1996-02/1998

1.6 i (F08, M08, F68, M68) 09/1991-01/1998

1.8 i 16V (F08, M08, F68, M68) 09/1994-01/1998

2.0 i 16V (F08, M08, F68, M68) 02/1995-01/1998

1.4 i (F08, M08, F68, M68) 09/1991-01/1998

1.8 i 16V (F08, M08, F68, M68) 06/1993-08/1994

1.8 i 16V (F08, M08, F68, M68) 09/1994-01/1998

1.6 i (F08, M08, F68, M68) 09/1991-01/1998

1.6 i 16V (F08, M08, F68, M68) 08/1994-01/1998

1.4 (F08, M08, F68, M68) 09/1992-01/1998

1.6 (F08, M08, F68, M68) 09/1995-01/1998

1.6 (F08, M08, F68, M68) 09/1995-01/1998

1.4 (F08, M08, F68, M68) 09/1991-09/1993

1.8 (F08, M08, F68, M68) 11/1991-07/1993

TIGRA (S93)

1.4 16V (F07) 07/1994-12/2000

1.4 16V (F07) 08/1997-12/2000

1.6 16V (F07) 07/1994-08/1998

1.6 16V (F07) 08/1997-08/1998

VECTRA B (J96)

1.8 i 16V (F19) 10/1995-09/2000

2.0 i 16V (F19) 09/1995-06/2000

1.6 i 16V (F19) 10/1995-04/2002

1.6 i 16V (F19) 10/1995-04/2002

1.8 i 16V (F19) 10/1995-09/2000

1.8 i 16V (F19) 09/2000-04/2002

2.2 i 16V (F19) 07/2000-07/2002

1.6 i 16V (F19) 10/1995-04/2002

2.0 i 16V (F19) 09/1995-06/2000

1.8 i 16V (F19) 10/1995-09/2000

1.6 i (F19) 10/1995-04/2002

1.6 i (F19) 10/1995-04/2002

2.0 i (F19) 10/1995-04/2002

OMEGA A (V87)

3.0 24V (3000) (F19, M19, N19) 09/1989-03/1994

3.0 24V (3000) (F19, M19, N19) 09/1989-03/1994

3.0 (3000) (F19, M19, N19) 03/1987-09/1990

2.6 i (F19, M19, N19) 09/1990-03/1994

3.0 (3000) Cat (F19, M19, N19) 03/1988-03/1994

2.0 i (F19, M19, N19) 09/1986-03/1994

2.0 (F19, M19, N19) 09/1986-03/1994

VECTRA B Hatchback (J96)

1.8 i 16V (F68) 10/1995-09/2000

2.0 i 16V (F68) 09/1995-06/2000

1.6 i 16V (F68) 10/1995-07/2002

1.6 i (F68) 10/1995-07/2003

1.8 i 16V (F68) 10/1995-09/2000

1.6 i 16V (F68) 10/1995-07/2002

1.6 i 16V (F68) 10/1995-07/2002

2.0 i 16V (F68) 09/1995-06/2000

1.8 i 16V (F68) 10/1995-09/2000

1.8 i 16V (F68) 09/2000-07/2003

1.6 i (F68) 10/1995-07/2003

2.0 i (F68) 10/1995-02/2002

2.0 i 16V (F68) 07/2000-07/2003

1.8 FlexFuel (F68) 01/1999-09/2000

2.2 i 16V (F68) 07/2000-07/2002

OMEGA A Estate (V87)

3.0 Cat (F35, M35) 03/1987-03/1994

3.0 24V (F35, M35) 09/1989-03/1994

2.6 i (F35, M35) 09/1990-03/1994

3.0 (F35, M35) 03/1987-09/1990

3.0 24V Omega 3000 (F35, M35) 09/1988-04/1994

2.0 (F35, M35) 09/1986-03/1994

2.0 i (F35, M35) 09/1986-04/1994

CALIBRA A (C89)

2.0 i (M07) 08/1989-12/1996

2.0 i 16V (M07) 06/1990-02/1994

2.0 i 16V (M07) 02/1994-07/1997

2.0 i 4x4 (M07) 06/1990-07/1997

2.0 i 16V 4x4 (M07) 02/1994-07/1997

2.0 i 16V 4x4 (M07) 06/1990-02/1994

2.0 i Turbo 4x4 (M07) 08/1991-07/1997

OMEGA B Estate (V94)

2.0 16V (F35, M35, P35) 03/1994-09/1999

2.0 (F35, M35, P35) 03/1994-09/1999

2.2 16V (F35, M35, P35) 09/1999-07/2003

2.2 16V (F35, M35, P35) 09/1999-07/2003

FRONTERA A Sport (U92)

2.0 i (52SUD2, 55SUD2) 03/1992-10/1998

2.0 i (52SUD2, 55SUD2) 03/1992-10/1998

OMEGA B (V94)

2.0 (F69, M69, P69) 03/1994-09/1999

2.0 16V (F69, M69, P69) 03/1994-09/1999

2.2 16V (F69, M69, P69) 09/1999-07/2003

2.0 (F69, M69, P69) 03/1994-12/2000

2.2 16V (F69, M69, P69) 09/1999-07/2003

ASTRA F Estate Van (T92)

1.4 i (F70) 10/1991-01/1999

1.6 i (F70) 10/1991-02/1998

1.6 i (F70) 02/1993-07/1996

1.7 TD (F70) 08/1994-01/1999

1.6 i (F70) 10/1991-02/1998

1.6 i 16V (F70) 08/1994-03/1998

1.6 i (F70) 03/1992-12/1994

1.8 i (F70) 06/1993-08/1994

FRONTERA B (U99)

2.2 i (6B_ZC, 6B_VF, 6B_66, 6B_76) 10/1998-07/2004

2.2 i (6B_ZC, 6B_VF, 6B_66, 6B_76) 10/1998-07/2004

VECTRA B Estate (J96)

1.6 i 16V (F35) 11/1996-07/2002

1.8 i 16V (F35) 11/1996-09/2000

1.8 i 16V (F35) 11/1996-09/2000

2.0 i 16V (F35) 11/1996-06/2000

1.6 i 16V (F35) 11/1996-07/2002

1.8 i 16V (F35) 11/1996-09/2000

2.0 i 16V (F35) 11/1996-06/2000

1.6 i (F35) 11/1996-06/2000

1.6 i 16V (F35) 11/1996-07/2002

1.6 i (F35) 11/1996-06/2000

2.0 i (F35) 11/1996-02/2002

1.8 i 16V (F35) 09/2000-07/2003

2.0 i 16V (F35) 07/2000-07/2003

SINTRA (APV)

2.2 i 16V (OUN16, Y94) 11/1996-04/1999

CORSA B Hatchback Van (S93)

1.4 i (F08, W5L) 08/1999-09/2000

1.4 i (F08, W5L) 08/1999-09/2000

ASTRA F CLASSIC Estate (T92)

1.4 i (F35, M35) 01/1998-01/2005

1.6 i 16V (F35, M35) 01/1998-01/2005

1.6 i (F35, M35) 01/1998-01/2005

ASTRA F CLASSIC Saloon (T92)

1.6 i 16V (F19, M19) 01/1998-08/2002

1.4 i (F19, M19) 01/1998-08/2002

1.6 i (F19, M19) 01/1998-08/2002

CORSA B Estate (S93)

1.4 i 16V (F35) 01/1999-12/2002

CORSA A Hatchback (S83)

1.6 GSI (F08, M08, F68, M68) 09/1989-03/1993

1.4 S (F08, M08, F68, M68) 01/1990-03/1993

1.4 i (F08, M08, F68, M68) 01/1990-03/1993

1.4 Si (F08, M08, F68, M68) 09/1991-03/1993

1.6 GSI (F08, M08, M68, F68) 08/1988-09/1992

ASTRA G Hatchback (T98)

2.0 16V (F08, F48) 02/1998-01/2005

1.4 16V (F08, F48) 02/1998-01/2005

1.4 16V (F08, F48) 02/1998-01/2005

1.6 (F08, F48) 02/1998-09/2000

1.6 16V (F08, F48) 02/1998-01/2005

1.6 16V (F08, F48) 02/1998-01/2005

1.6 16V (F08, F48) 02/1998-01/2005

1.8 16V (F08, F48) 09/2000-01/2005

ASTRA G Estate (T98)

2.0 16V (F35) 02/1998-07/2004

1.4 16V (F35) 06/1998-07/2004

1.6 16V (F35) 02/1998-07/2004

1.6 (F35) 02/1998-09/2000

1.4 16V (F35) 06/1998-07/2004

1.6 16V (F35) 02/1998-07/2004

1.8 16V (F35) 09/2000-07/2004

ASTRA G Saloon (T98)

2.0 16V (F69) 09/1998-01/2005

1.6 16V (F69) 09/1998-01/2005

1.6 16V (F69) 09/1998-01/2005

1.6 (F69) 09/1998-09/2000

1.4 16V (F69) 09/1998-01/2005

1.4 16V (F69) 09/1998-01/2005

1.8 16V (F69) 06/2000-01/2005

CORSA A TR (S83)

1.4 i (F11, M11, F19, M19) 10/1989-03/1993

1.4 S (F11, M11, F19, M19) 09/1989-03/1993

ASTRA G Coupe (T98)

1.6 16V (F07) 03/2000-05/2005

ASTRA G Convertible (T98)

1.6 16V (F67) 03/2001-10/2005

ASTRA F CLASSIC Hatchback (T92)

1.6 i 16V (F08, M08, F68, M68) 01/1998-08/2002

1.4 i (M08, M68, F08, F68) 01/1998-08/2002

1.6 i (F08, M08, F68, M68) 01/1998-08/2002

ASTRA G Estate Van (F70)

1.6 (F70) 01/1999-09/2000

ASTRA H Estate (A04)

1.8 (L35) 08/2004-10/2010

ASTRA H (A04)

1.8 (L48) 01/2004-10/2010

ASTRA H TwinTop (A04)

1.8 (L67) 09/2005-10/2010

ASTRA H GTC (A04)

1.8 (L08) 03/2005-10/2010

ZAFIRA / ZAFIRA FAMILY B (A05)

1.6 CNG (M75) 07/2005-04/2015

CHEVROLET

CORSA Saloon

1.6 GLS (19) 08/1994-07/2002

1.6 GS 08/1997-07/2002

1.6 GLS (19) 08/1994-07/2002

CORSA Estate

1.6 GLS (35) 08/1997-07/2002 1.6 GLS (35) 08/1997-07/2002

ISUZU

RODEO Closed Off-Road Vehicle

2.2 4WD 09/1997-12/2003

VAUXHALL

ASTRA Mk III (F) Hatchback (T92)

1.6 i 03/1992-02/1998 2.0 i 16V 01/1994-02/1998

2.0 i 16V 09/1991-02/1998 1.8 i 16V 09/1994-02/1998

FRONTERA Mk I (A) (U92)

2.0 04/1995-08/1998 2.0 04/1995-08/1998

CALIBRA (C89)

2.0 i 16V 06/1990-07/1997 2.0 i 16V 4x4 02/1994-07/1997

2.0 i Turbo 4x4 03/1992-07/1997

CAVALIER Mk III Hatchback (J89)

2.0 i 16V 09/1992-08/1995

OMEGA (B) Saloon (V94)

2.0 03/1994-09/1999 2.2 16V 01/1994-06/2003 2.2 16V 01/1994-06/2003

TIGRA Mk I (S93)

1.6 16V 07/1994-12/2000

Omega

2.0 i 03/1994-12/2000 2.0 03/1994-12/2000 2.0 16V 09/1993-09/1999

2.2 i 16V 09/1999

VECTRA (B) Saloon (J96)

1.6 i (F19) 08/1995-10/2001 1.6 i 16V (F19) 08/1995-10/2001

Vectra

1.8 i 16V 10/1995-09/2000 1.6 i 16V 09/1995-08/2001

2.0 i 16V 10/1995-09/2000 1.6 i 16V 09/1995-08/2001

1.8 i 16V 10/1995-09/2000 2.0 i 10/1995-03/2002 1.6 i 11/1996-03/2002

1.6 i 16V 09/1995-03/2002

Frontera B

2.2 i 09/1998-10/2004 2.2 i 10/1998-10/2004

Cavalier MK

2.0 i Turbo 4x4 06/1992-08/1995 2.0 i T 4x4 06/1992-11/1994

ASTRA Mk III (F) Estate (T92)

2.0 i 16V 01/1994-02/1998 1.8 i 16V 09/1994-02/1998

CORSA Mk I (B) (S93)

1.4 i 03/1993-09/2000 1.4 i 16V 09/1994-09/2000

Corsa B

1.6 GSi 16V 03/1993-09/2000 1.4 i 03/1993-09/2000 1.4 i 03/1993-09/2000

1.6 i 16V 09/1994-09/2000

Astra MK III

1.8 i 16V 01/1994-12/1996 1.6 01/1994-02/1998 1.4 05/1993-02/1998

2.0 16V 01/1994-02/1998 1.4 09/1991-09/1993 1.8 16V 09/1995-02/1998

1.8 09/1991-02/1998

FRONTERA Mk II (B) (U99)

2.2 i 10/1998-10/2004

VECTRA (B) Hatchback (J96)

1.6 i (F68) 08/1995-10/2001 1.6 i 16V (F68) 08/1995-10/2001

OMEGA (B) Estate (V94)

2.2 16V 02/1994-06/2003 2.2 16V 02/1994-06/2003

Frontera A

2.0 i 4x4 Sport 03/1992-10/1998 2.0 i 4x4 Sport 03/1992-10/1998

2.2 i 4x4 Long 03/1995-10/1998

ASTRA Mk III (F) Convertible (T92)

2.0 i 16V 01/1994-02/1998 1.8 09/1994-08/1996 1.8 16V 11/1994-03/2001

1.8 16V 11/1994-03/2001

Cavalier

2.0 i 4x4 09/1988-08/1995

CORSAVAN Mk I (B) Hatchback Van (S93)

1.4 i 01/1994-09/2000

Combo

1.4 07/1994-10/2001

Tigra

1.6 16V 07/1994

Astra F

1.6 i 03/1993-02/1998 1.8 i 09/1991-09/1998 2.0 i 09/1991-09/1998

1.6 i 03/1992-03/2001 1.8 i 16V 06/1993-02/1998

Vectra B

1.8 Dualfuel 09/2000-07/2003

Astra MK II

2.0 i 01/1991-08/1993

COMBO Mk I (B) (S93)

1.4 07/1994-10/2001

ASTRA Mk III (F) Saloon (T92)

2.0 i 16V 02/1995-09/1998