SINTLY

SINTLY | STARTER MOTOR
XTLSTR0033

VOLTAGE **12** V

POWER **1.10** kW

APPLICATIONS AUDI, SKODA,VW

DIMENSIONS

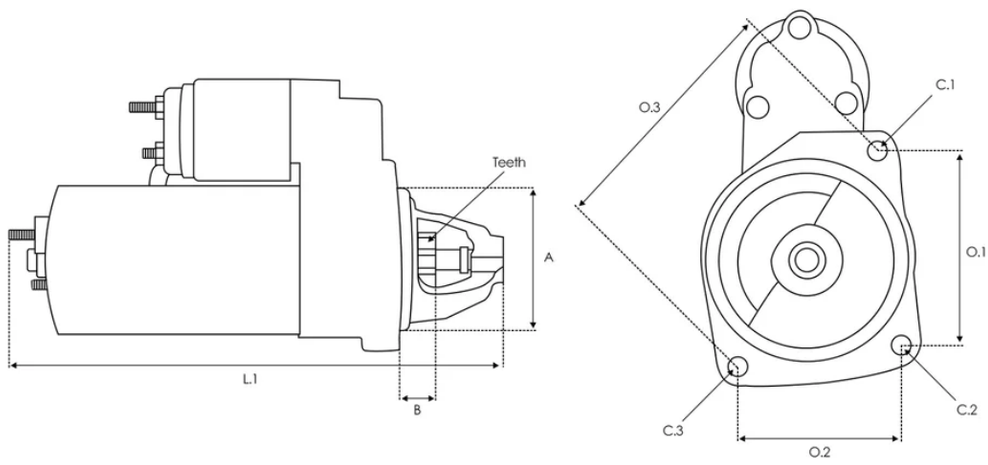

A **82.50 mm** B **15.00 mm** Teeth **9 qty.** L.1 **227.00 mm** O.1 **101.00 mm** C.1 **M12x1.75 mm** C.2 **M12x1.75 mm**

Números OE

Other	0001107068

Código equivalente

3EFFE	PRSS018 STRS018
A.Z. MEISTERTEILE	AZMT-53-010-1003

ACAUTO	AC-CBS0509 AC-CBS0612
AINDE	AI-80162
ALANKO	10440838 11440838
ANDEL	ANM18550 ANM18550X
APEC	ASM1576
AS-PL	S0054
ATL AUTOTECHNIK	A16330
AUTOELECTRO	AES9190
AUTOTEAM	SBO106A
BOLK	BOL-G091200
BORG & BECK	BST2323
BORSEHUNG	B19115
BOSCH	0001107001 0001107012 0001107013 0001107017 0001107018 0001107054 0001107055 0001107069 0001107069-R 0001107073 0001107074 0001112013 0986016330 0986016337 0986019477 1986S00658 B001110043 F042002028 F042S02028 SR0416X SR0421X

BOVEZ	STA0116R
BTS TURBO	S100017 S100042 S102362 S102852
CARGO	112321 F032112321 F032US0022
CARWOOD GROUP	BREF0320986016330 BREF032112321
CASCO	CST10106AS
CEVAM	3532
DELCO	DRS4630 DRS6330 RAS37441
DENSO	DSN3109
DRI	311049092
EAI	11701
EGT	910023EGT
ELECTROLOG	STR1136 STR1282 STR1957
ELSTOCK	26-1434
ERA	220004 220004A
EUROREPAR	1638125680
EUROTEC	11016330

EXACT	2-0085
FARCOM	103343
FEBI BILSTEIN	101592
FRIESEN	8016330
GHIBAUDI	SG0073 SG0073RB
HC PARTS	CS612
HELLA	8EA011610-461 8EA730182-001
HENKEL PARTS	3114670 3114671 3114672 3114674
HERTH+BUSS	42014630 42016330
IKA	6.7022.1
ITAB AUTOMOTIVE	10010106AV
KRAUF	STB0612
KUHNER	10569 10612 10612B 10612V
LAUBER	22.0569M 22.0612
LE PART	LES0419
LOGISTIK	330661 330721 330764

LUCAS	LRS00990 LRS990
MAGNETI MARELLI	063720612010 943251333010 944251333010 944280163300 MQS612 MRS16330 MSR960
MAPCO	13877
MAXGEAR	55-0832
MEAT & DORIA	5010181
MTR	12138026
NAPA	NPANSM1576
NK	4716340
OMNICRAFT	2131359
POWERMAX	88212723
PRESTOLITE	20500990 S1012B S1013B
PROTECH	IR8237 IR8375
QUINTON HAZELL	QRS1596
REAL	20401601BN
REMANTE	011-001-000033R
RIDEX	2S0078 2S0078R

RNL	RNL1633 RNL1633V RNLD6RA77
ROLLCO	STM590
SANDO	6010106.0
SEG AUTOMOTIVE	T001002107
SIDAT	S12BH0140A2
SIOM	MAV6650 MAV6650A
SNRA	AU9018
SOVEREIGN	SS678
STARDAX	STX200059 STX200059R STX200192 STX200195 STX200529
STARK	SKSTR-0330077
STARLINE	SX2011
STARTCAR	701ST11
TESLA TECHNICS	TT15477PRO
THE NEWLINE	RE8678N
TMI	ST02369

VALEO	201045 438430 442015 455680 460492 726037 726837 D6RA77
VEMO	V10-12-16330
VIKA	99111635001
VW	026911023C 026911023CX 026911023E 026911023EX 026911023F 026911023FX 026911023G 026911023GX 053911023 053911023A 053911023AX 053911023B 053911023BX 058911023B 058911023BV 058911023BX 06B911023 06B911023X 26911023C 26911023CX 26911023E 26911023EX 26911023F 26911023FX 26911023G 26911023GX 53911023 53911023A 53911023AX 53911023B 53911023BX 58911023B 58911023BV 58911023BX 6B911023 6B911023X L06B911023
WAI	12419N 17751N 17751R 200.509.092.000 200.509.092.010 200.509.092.210 200.509.092.211 200.509.092.215 200.509.092.216 200.509.092.340 200.509.092.390 200.509.092.500 200.509.092.900 S131.129 S143.931
WALKER	WST00135
WILMINK GROUP	WG2012668 WG2045414 WG2174889 WG2226337
WOODAUTO	STR2035 STR2035A STR50028 STR50121 WOOSTR2035 WOOSTR2035A WOOSTR50028 WOOSTR50121

Aplicaciones

AUDI

A6 C4 Avant (4A5)

1.8 12/1995-12/1997 | 2.0 16V 06/1994-12/1997 | 2.0 06/1994-12/1997

1.8 quattro 12/1995-12/1997 | 2.0 16V quattro 06/1994-12/1997

2.0 06/1994-12/1997 | 2.0 06/1994-07/1995

A6 C4 (4A2)

2.0 16V quattro 06/1994-10/1997 | 2.0 06/1994-10/1997

2.0 06/1994-10/1997 | 2.0 16V 06/1994-10/1997 | 2.0 06/1994-07/1995

1.8 12/1995-10/1997 | 1.8 quattro 12/1995-10/1997

80 B4 Saloon (8C2)

2.0 E 16V quattro 04/1992-12/1994 | 2.0 E 16V 08/1992-12/1994

1.6 E 06/1993-12/1994 | 2.0 quattro 11/1993-07/1994 | 2.0 09/1991-12/1994

2.0 E 09/1991-12/1994 | 1.6 09/1991-12/1994

2.0 E quattro 09/1991-12/1994 | 2.0 E 16V 09/1991-07/1992

COUPE B3 (89, 8B3)

2.0 16 V 08/1992-12/1996 | 2.0 16 V 01/1992-07/1992 | 2.0 05/1989-12/1996

2.0 05/1989-12/1996 | 1.8 08/1989-07/1991 | 2.0 05/1989-03/1990

2.0 03/1990-07/1990

80 B3 Saloon (893, 894, 8A2)

2.0 E 16V quattro 03/1990-08/1991 | 1.8 10/1986-01/1990

1.8 S quattro 09/1986-09/1991 1.8 S quattro 09/1986-09/1991

2.0 quattro 10/1990-08/1991 1.8 S 09/1986-10/1991 1.8 quattro 09/1986

1.8 09/1986-07/1988 1.8 S 09/1986-10/1991 1.8 S 09/1986-10/1991

2.0 E quattro 08/1988-09/1990 2.0 E 08/1988-10/1990

1.8 S 08/1986-01/1990 1.8 S quattro 09/1986-07/1990

1.8 S 09/1986-10/1991 1.6 09/1986-08/1991 2.0 E 16V 03/1990-09/1991

1.8 S quattro 09/1986-09/1991 1.8 S quattro 09/1986-09/1991

1.8 E 06/1986-08/1991 1.8 E quattro 09/1986-08/1991

1.8 S 09/1986-10/1991 1.6 08/1987-09/1991 1.6 08/1990-10/1991

1.4 08/1986-07/1988 2.0 E 08/1990-10/1991

100 C4 Avant (4A5)

2.0 E quattro 12/1990-07/1992 2.0 E 16V quattro 07/1992-07/1994

2.0 E 16V 07/1992-07/1994 2.0 E 09/1991-07/1994 2.0 E 09/1991-07/1994

2.0 E 09/1991-07/1994

CABRIOLET B3 (8G7)

2.0 E 01/1993-07/1998 1.8 01/1997-08/2000

100 C3 Saloon (443, 444)

1.8 quattro 08/1986-07/1990 1.8 02/1986-07/1988

1.8 Cat 03/1985-11/1990 1.8 Cat quattro 08/1985-11/1990

1.8 Cat 03/1985-11/1990 1.8 Cat quattro 08/1985-11/1990

1.8 08/1983-07/1989 1.8 08/1983-07/1989 1.8 quattro 10/1984-07/1988

1.8 08/1983-07/1989 1.8 quattro 10/1984-07/1988 1.8 08/1983-07/1989

2.0 08/1986-11/1987 1.8 08/1982-12/1987 1.8 08/1982-12/1987

80 B4 Avant (8C5)

2.0 E 16V 02/1993-01/1996 1.6 E 06/1993-01/1996 2.0 07/1992-01/1996

2.0 E 07/1992-01/1996 2.0 E 16V quattro 12/1992-07/1995

2.0 quattro 11/1993-01/1996

100 C4 Saloon (4A2)

2.0 E quattro 12/1990-07/1992 2.0 E 16V quattro 07/1992-07/1994

2.0 E 16V 01/1992-07/1994 2.0 E 12/1990-07/1994 2.0 12/1990-07/1994

2.0 E 12/1990-07/1994

A4 B6 Avant (8E5)

1.8 T 09/2001-07/2002 2.0 09/2001-12/2004

1.8 T quattro 09/2001-07/2002 1.6 09/2001-12/2004

1.8 T 11/2002-12/2004 1.8 T quattro 11/2002-12/2004

1.8 T quattro 07/2002-12/2004 1.8 T 07/2002-12/2004

2.0 FSI 07/2002-12/2004

A6 C5 Avant (4B5, 4B6)

2.0 08/2001-01/2005 1.8 T 04/1999-01/2005 1.8 T 12/1997-01/2005

1.8 T 12/1997-01/2005 1.8 T 12/1997-01/2005 1.8 T 12/1997-01/2005

1.8 T quattro 12/1997-01/2005 1.8 T quattro 12/1997-01/2005

1.8 12/1997-01/2005 1.8 T quattro 12/1997-01/2005

1.8 T quattro 12/1997-01/2005 1.8 12/1997-01/2005

1.8 T 12/1997-01/2005 1.8 12/1997-01/2005

1.8 T quattro 12/1997-01/2005 1.8 T quattro 12/1997-01/2005

1.8 02/1998-01/2005

A4 B6 Convertible (8H7)

1.8 T quattro 05/2003-12/2005 1.8 T 07/2002-12/2005

2.0 09/2004-12/2005

A4 B6 (8E2)

1.8 T quattro 07/2001-12/2004 1.8 T quattro 07/2001-12/2004

2.0 FSI 07/2002-12/2004 1.6 11/2000-12/2004 2.0 11/2000-12/2004

1.8 T 11/2002-12/2004 1.8 T quattro 07/2002-12/2004

1.8 T 07/2002-12/2004 1.8 T quattro 11/2002-12/2004

1.8 T 11/2000-07/2002 1.8 T quattro 11/2000-07/2002

A4 B7 Convertible (8HE)

1.8 T 01/2006-03/2009 2.0 TFSI 16V 01/2006-03/2009

2.0 TFSI 16V 01/2006-03/2009

100 C3 Avant (445, 446)

1.8 08/1983-07/1989 1.8 08/1983-07/1989 1.8 08/1983-07/1989

1.8 08/1983-07/1989 1.8 02/1986-07/1990 1.8 quattro 10/1984-07/1988

1.8 Cat 03/1985-11/1990 1.8 quattro 10/1984-07/1988

1.8 quattro 08/1986-07/1990 1.8 Cat quattro 08/1985-10/1990

1.8 Cat quattro 08/1985-10/1990 1.8 Cat 03/1985-11/1990

2.0 TD 03/1988-11/1990 1.8 08/1982-12/1987 1.8 08/1982-12/1987

A6 C5 (4B2, 4B4)

1.8 T 12/1997-01/2005 1.8 T 01/1997-01/2005 1.8 T 01/1997-01/2005

1.8 T quattro 02/1997-01/2005 1.8 T 01/1997-01/2005

1.8 07/1997-01/2005 1.8 T quattro 02/1997-01/2005

1.8 T 01/1997-01/2005 1.8 T quattro 02/1997-01/2005

1.8 T 01/1997-01/2005 1.8 T quattro 02/1997-01/2005

1.8 07/1997-01/2005 1.8 07/1997-01/2005 1.8 T quattro 02/1997-01/2005

1.8 T quattro 12/1997-01/2005 2.0 08/2001-01/2005 1.8 05/1997-01/2005

A4 B5 (8D2)

1.8 T 12/1997-11/2000 1.8 T quattro 01/1995-11/2000

1.8 T 01/1995-11/2000 1.8 11/1994-11/2000 1.8 T 01/1995-11/2000

1.8 T 01/1995-11/2000 1.8 11/1994-11/2000 1.8 T 01/1995-11/2000

1.8 11/1994-11/2000 1.8 11/1994-11/2000 1.8 T quattro 01/1995-11/2000

1.8 T 01/1995-11/2000 1.8 T 01/1995-11/2000

1.8 quattro 01/1995-11/2000 1.8 T quattro 01/1995-11/2000

1.8 T quattro 01/1995-11/2000 1.8 quattro 01/1995-11/2000

1.8 quattro 01/1995-11/2000 1.8 T quattro 01/1995-11/2000

1.8 T quattro 01/1995-11/2000 1.8 T quattro 12/1997-11/2000

1.6 07/2000-11/2000 1.8 quattro 07/1995-11/2000 1.8 04/1995-11/2000

1.6 11/1994-10/2000 1.6 11/1994-10/2000 1.6 11/1994-10/2000

1.6 11/1994-10/2000 2.5 TDI 09/1997-11/2000 2.5 TDI 09/1997-11/2000

2.5 TDI quattro 09/1997-11/2000 2.5 TDI quattro 09/1997-11/2000

A4 B5 Avant (8D5)

1.8 07/1995-09/2001 1.8 02/1996-09/2001 1.8 T quattro 01/1996-09/2001

1.8 02/1996-09/2001 1.8 T quattro 01/1996-09/2001

1.8 T quattro 01/1996-09/2001 1.8 T 03/1996-09/2001

1.8 T quattro 01/1996-09/2001 1.8 quattro 01/1996-09/2001

1.8 T 03/1996-09/2001 1.8 T quattro 01/1996-09/2001

1.8 T 03/1996-09/2001 1.8 T 03/1996-09/2001

1.8 quattro 01/1996-09/2001 1.8 02/1996-09/2001

1.8 quattro 01/1996-09/2001 1.8 T 03/1996-09/2001

1.8 T quattro 01/1996-09/2001 1.8 02/1996-09/2001

1.8 T quattro 12/1997-09/2001 1.8 T 12/1997-09/2001

1.8 quattro 07/1995-09/2001 1.6 07/2000-09/2001 1.6 11/1994-09/2001

1.6 11/1994-09/2001 1.6 11/1994-09/2001 1.6 11/1994-09/2001

2.5 TDI quattro 09/1997-09/2001 2.5 TDI 09/1997-09/2001

2.5 TDI quattro 09/1997-09/2001 2.5 TDI 09/1997-09/2001

90 B3 (893, 894, 8A2)

2.0 quattro 08/1989-07/1990 1.8 E 08/1989-08/1991 2.0 07/1988-09/1991

COUPE B2 (81, 855, 856)

1.8 GT quattro 12/1984-10/1988 1.8 GT 09/1982-10/1988

1.8 08/1981-07/1983 1.8 GT 09/1982-10/1988 1.8 GT 09/1982-10/1988

1.8 GT 08/1986-10/1988 1.8 GT 04/1986-10/1988 1.8 GT 08/1986-10/1987

1.6 07/1980-08/1981

80 B2 Saloon (811, 813, 814, 819, 853)

1.3 09/1978-07/1986 1.6 08/1978-03/1987 1.8 GTE 10/1984-08/1986

1.8 02/1986-07/1986 1.8 GTE quattro (85Q) 08/1984-08/1986

1.8 CC quattro (85Q) 08/1984-08/1986 1.6 08/1978-03/1987

1.8 GTE 10/1984-08/1986 1.8 01/1983-08/1986

1.8 GTE quattro (85Q) 03/1985-08/1986 1.8 01/1983-08/1986

1.8 CC quattro (85Q) 08/1984-08/1986 1.8 01/1983-08/1986

1.8 CC quattro (85Q) 08/1984-08/1986 1.8 GTE 08/1985-07/1986

100 C2 Avant (435, 436)

1.6 07/1977-02/1983

A4 B7 (8EC)

3.0 TDI quattro 01/2006-06/2008

VW

PASSAT B5.5 (3B3)

2.0 11/2001-05/2005 1.8 T 4motion 11/2003-05/2005

1.8 T 02/2001-11/2005 2.0 4motion 11/2000-05/2005 2.0 11/2000-05/2005

1.8 T 20V 11/2000-05/2005 1.6 11/2000-05/2005

PASSAT B5.5 Variant (3B6)

2.0 11/2001-05/2005 1.8 T 05/2002-08/2005 1.6 11/2000-05/2005

2.0 4motion 11/2000-05/2005 1.8 T 20V 11/2000-05/2005

2.0 11/2000-05/2005

PASSAT B5 (3B2)

2.0 4motion 04/2000-11/2000 2.0 04/2000-11/2000 2.0 04/2000-11/2000

1.8 T 10/1996-11/2000 1.8 T 10/1996-11/2000 1.8 T 10/1996-11/2000

1.8 T 10/1996-11/2000 1.8 T 10/1996-11/2000

1.8 Syncro/4motion 12/1996-08/2000 1.8 Syncro/4motion 12/1996-08/2000

1.8 Syncro/4motion 12/1996-08/2000 1.8 01/1997-11/2000

1.8 10/1996-11/2000 1.6 10/1996-11/2000 1.6 10/1996-11/2000

1.6 10/1996-11/2000 1.8 10/1996-11/2000 1.6 10/1996-11/2000

1.8 10/1996-11/2000 2.8 V6 Syncro/4motion 10/1996-11/2000

2.8 V6 Syncro/4motion 10/1996-11/2000 1.9 TDI 10/1996-11/2000

2.8 V6 Syncro/4motion 10/1996-11/2000

2.8 V6 Syncro/4motion 10/1996-11/2000 2.3 VR5 10/1996-11/2000

1.9 TDI 10/1996-11/2000 2.8 V6 Syncro/4motion 10/1996-11/2000

2.8 V6 08/1996-11/2000 2.8 V6 08/1996-11/2000

2.3 VR5 Syncro/4motion 10/1997-11/2000 2.8 V6 08/1996-11/2000

2.8 V6 08/1996-11/2000

PASSAT B5 Variant (3B5)

2.0 4motion 04/2000-11/2000 2.0 4motion 04/2000-11/2000

2.0 04/2000-11/2000 2.0 04/2000-11/2000

1.8 Syncro/4motion 06/1997-11/2000 1.6 06/1997-11/2000

1.8 Syncro/4motion 06/1997-11/2000 1.6 06/1997-11/2000

1.8 T 05/1997-11/2000 1.6 06/1997-11/2000 1.8 T 05/1997-11/2000

1.8 T 05/1997-11/2000 1.8 Syncro/4motion 06/1997-11/2000

1.8 T 05/1997-11/2000 1.8 T 05/1997-11/2000 1.6 06/1997-11/2000

1.8 06/1997-11/2000 1.8 06/1997-11/2000 1.8 06/1997-11/2000

1.8 06/1997-11/2000 2.8 V6 Syncro/4motion 06/1997-11/2000

2.8 V6 06/1997-11/2000 1.9 TDI 06/1997-11/2000

2.3 VR5 Syncro/4motion 10/1997-11/2000

2.8 V6 Syncro/4motion 06/1997-11/2000 2.8 V6 06/1997-11/2000

1.9 TDI 06/1997-11/2000 2.8 V6 06/1997-11/2000 2.8 V6 06/1997-11/2000

2.3 VR5 06/1997-11/2000 2.8 V6 06/1997-11/2000

2.8 V6 Syncro/4motion 06/1997-11/2000

2.8 V6 Syncro/4motion 06/1997-11/2000

2.8 V6 Syncro/4motion 06/1997-11/2000

2.8 V6 Syncro/4motion 06/1997-11/2000

SANTANA (32B)

1.6 08/1981-12/1984 1.8 01/1983-12/1984

PASSAT B2 Variant (33B)

1.6 08/1980-07/1983 1.8 Syncro 01/1986-03/1988 1.6 01/1981-02/1983

1.8 01/1983-03/1988 1.6 08/1980-07/1983 1.8 01/1983-03/1988

1.6 08/1986-03/1988 1.8 Syncro 01/1986-03/1988 1.6 02/1986-03/1988

1.8 01/1983-03/1988 1.6 08/1986-03/1988 1.6 08/1980-07/1983

1.8 05/1986-03/1988 1.8 12/1983-03/1988 1.3 08/1980-07/1986

1.6 08/1983-03/1988 1.3 08/1980-07/1986 1.6 08/1983-03/1988

PASSAT B2 Saloon (32B)

1.6 08/1984-03/1988 1.8 01/1985-03/1988 1.6 01/1985-03/1988

1.6 08/1984-03/1988 1.8 01/1985-03/1988 1.8 05/1986-03/1988

1.6 08/1986-03/1988 1.6 08/1986-03/1988

PASSAT B2 (32B)

1.6 09/1979-03/1988 1.6 01/1981-02/1983 1.8 05/1986-03/1988

1.6 09/1979-03/1988 1.8 01/1983-03/1988 1.6 09/1979-03/1988

1.8 12/1983-03/1988 1.6 02/1986-03/1988 1.8 01/1983-03/1988

1.8 01/1983-03/1988 1.3 08/1980-07/1986 1.6 08/1980-03/1988

1.3 08/1980-07/1986

SKODA

SUPERB I (3U4)

2.0 12/2001-03/2008 1.8 T 12/2001-03/2008