SINTLY

SINTLY | STARTER MOTOR

XTLSTR0036

VOLTAGE **12** V

POWER **1.2** kW

APPLICATIONS CHEVROLET, DAEWOO, OPEL, VAUXHALL

DIMENSIONS

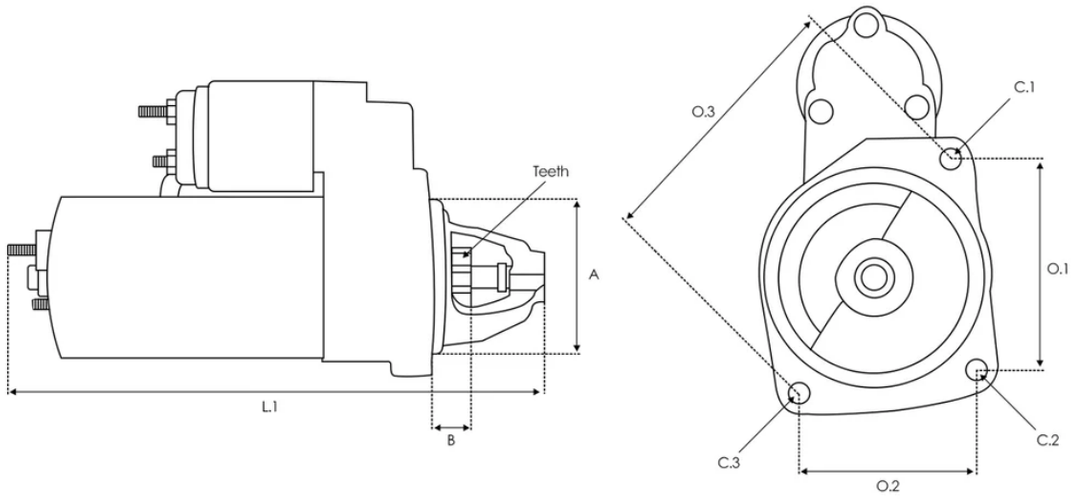

A **82.50 mm** B **19.00 mm** Teeth **9 qty.** L.1 **217.00 mm** O.1 **115.00 mm** C.1 **M12x1.75 mm** C.2 **10.50 mm**

Números OE

Other	0001107045

Código equivalente

3EFFE	PRSS041 STRS041
ACAUTO	AC-CBS0879

AINDE	25-2079CT
AIRSTAL	30-0354
ALANKO	10440674
ANDEL	ANM15773X ANM19100
AS-PL	S0098
ATL AUTOTECHNIK	A16880
AUTO MAGNETO	AM-2045
AUTOELECTRO	AES1207 AES1290
AUTOTEAM	SBO200A
BORG & BECK	BST2380
BOSCH	0001107034 0001107056 0001107100 0001107101 0001107108 0001107118 0986016880 1986S00664 B001110097
BOVEZ	STA0212R
BTS TURBO	S100029 S104872 S510736
CARGO	111848 F032111848
CARWOOD GROUP	BREF032111848 BREF0321986S00664

CASCO	CST10200AS
CEVAM	3668
CHEVROLET	96450663 96473777 96843582
COMLINE	CST0239
DA SILVA	020990
DAEWOO	96430345
DELCO	8000159 96473779 DRS6880 DRS6880N DRS7920
DRI	328032092 328052092
EAI	11768
ELECTROLOG	STR10294 STR1130
ELSTOCK	25-2079 25-2264
ERA	220119 220119A 220119R
EUROTEC	11016880
FARCOM	103368
FRIESEN	8016880 8017920

GHIBAUDI	SG0172 SG0172RB
HC PARTS	CS879
HELLA	8EA012526-831 8EA732658-001
HENKEL PARTS	3110664 3110665 3110666 3110668
HERTH+BUSS	42017920
HOFFER	H5010347
IAP QUALITY PARTS	803-20051
ISKRA / LETRIKA	11.131.010 AZE2113 IS1024
ISUZU	8920641810
ITAB AUTOMOTIVE	10010200AV
KRAUF	STB0879
KUHNER	10879 10879R
LAUBER	22.0879
LE PART	LES0360
LOGISTIK	331031
LUCAS	LRS02084 LRS2084 LRT00107 LRT00190 LRT0107 LRT107

MAGNETI MARELLI	063720879010 943251334 943253114 944280179200
MAHLE	72735989 MS361
MEAT & DORIA	5010347
NK	4716880
NPS	D521O06
OPEL	10515815 1202029 1202140 1202145 1202158 1202159 24422272 4805518 55351638 6202008 6202053 6202057 6202066 6202076 9000961 90370766 90371765 90371766 90449689 90451825 90487345 90508037 90512189 90518627 9200961 92064181 92087059 93175888 93176061 96627035 96843579 96952007 R1540014
OSSCA	04288
POWERMAX	8212596 88212596
PRESTOLITE	S1039B
PROTECH	IR8373
QUINTON HAZELL	QRS1320 QRS2142
REAL	20401002BN

REMANTE	011-001-000030R
RIDEX	2S0160 2S0160R 2S0228
RNL	RNL1688
ROLLCO	STM527
SANDO	6010200.0
SIDAT	S12BH0202A2
SIOM	MAV4820 MAV6310
SNRA	OP9023
SOVEREIGN	SS831
STARDAX	STX200092 STX200092R
STARK	SKSTR-0330159 SKSTR-0330227
STARTCAR	768ST11
STELLOX	06-10035-SX
TESLA	TT15989
THE NEW LINE	RE8102N
TMI	ST00754 ST00910

TURBO-TEC	TTST001097
VALEO	438131 455879 458184 D6RA92
VEMO	V40-12-16880
WAI	130.518.092.010 130.518.092.011 130.518.092.018 130.518.092.215 130.518.092.340 130.518.092.390 130.518.092.395 130.518.092.415 130.518.092.461 130.518.092.609 33083N S129.671 S145.000 S148.595
WALKER	WST00644
WILMINK GROUP	WG2012754 WG2045126 WG2470948 WG2656585
WOODAUTO	STR50008 STR50200
WXQP	560925

Aplicaciones

OPEL

ASTRA H GTC (A04)

2.0 Turbo (L08) 03/2005-10/2010

2.0 Turbo (L08) 03/2005-10/2010

2.0 Turbo (L08) 08/2005-10/2010

ASTRA H TwinTop (A04)

2.0 Turbo (L67) 09/2005-10/2010

2.0 Turbo (L67) 09/2005-10/2010

ZAFIRA / ZAFIRA FAMILY B (A05)

2.0 (M75) 07/2005-12/2010 2.0 (M75) 01/2006-12/2010

ANTARA A (L07)

2.4 08/2006-12/2011 2.4 4x4 08/2006-12/2011 2.4 09/2008-12/2011

2.4 LPG 4x4 08/2006-12/2010 2.4 LPG 10/2008-08/2010

ASTRA H Estate (A04)

2.0 Turbo (L35) 09/2004-10/2010 2.0 Turbo (L35) 08/2004-10/2010

ASTRA H (A04)

2.0 Turbo (L48) 03/2005-10/2010 2.0 Turbo (L48) 03/2004-10/2010

2.0 Turbo (L48) 09/2004-10/2010

ZAFIRA B Box Body/MPV (A05)

2.0 VAN (M75) 07/2005-12/2010

VECTRA B Hatchback (J96)

2.0 i 16V (F68) 09/1995-06/2000 2.0 i 16V (F68) 09/1995-06/2000

1.8 i 16V (F68) 10/1995-09/2000 2.0 i 16V (F68) 07/2000-07/2003

1.8 FlexFuel (F68) 01/1999-09/2000 2.2 i 16V (F68) 07/2000-07/2002

1.8 i 16V (F68) 10/1995-09/2000 1.8 i 16V (F68) 10/1995-09/2000

VECTRA A (J89)

2.0 i 16V 4x4 (F19, M19) 06/1994-11/1995

2.0 i 16V (F19, M19) 08/1992-08/1995

ASTRA F Convertible (T92)

1.8 i 16V 11/1994-03/2001 1.8 i 16V 11/1994-03/2001

FRONTERA A (U92)

2.2 i (54MWL4) 03/1995-10/1998

ASTRA F Estate (T92)

1.8 i 16V (F35, M35) 07/1994-01/1998

1.8 i 16V (F35, M35) 07/1994-01/1998

1.8 i 16V (F35, M35) 06/1993-01/1998

2.0 i 16V (F35, M35) 02/1995-01/1998

1.8 (F35, M35) 11/1991-07/1993

ASTRA F Saloon (T92)

2.0 i 16V (F19, M19) 02/1995-09/1998

1.8 i 16V (F19, M19) 11/1994-09/1998

1.8 i 16V (F19, M19) 11/1994-09/1998

1.8 i 16V (F19, M19) 11/1994-09/1998

1.8 i 16V (F19, M19) 06/1993-10/1994

1.8 i 16V (F19, M19) 09/1995-09/1996

CALIBRA A (C89)

2.0 i 16V (M07) 02/1994-07/1997

2.0 i 16V 4x4 (M07) 02/1994-07/1997

ASTRA F Hatchback (T92)

2.0 i 16V (F08, M08, F68, M68) 02/1995-01/1998

1.8 i 16V (F08, M08, F68, M68) 09/1994-01/1998

1.8 i 16V (F08, M08, F68, M68) 06/1993-08/1994

1.8 i 16V (F08, M08, F68, M68) 09/1994-01/1998

1.8 (F08, M08, F68, M68) 11/1991-07/1993

VECTRA B (J96)

2.0 i 16V (F19) 09/1995-06/2000

2.0 i 16V (F19) 09/1995-06/2000

1.8 i 16V (F19) 10/1995-09/2000

2.2 i 16V (F19) 07/2000-07/2002

1.8 i 16V (F19) 10/1995-09/2000

1.8 i 16V (F19) 10/1995-09/2000

OMEGA B Estate (V94)

2.0 16V (F35, M35, P35) 03/1994-09/1999

2.2 16V (F35, M35, P35) 09/1999-07/2003

2.2 16V (F35, M35, P35) 09/1999-07/2003

OMEGA B (V94)

2.0 16V (F69, M69, P69) 03/1994-09/1999

2.2 16V (F69, M69, P69) 09/1999-07/2003

2.2 16V (F69, M69, P69) 09/1999-07/2003

VECTRA A Hatchback (J89)

2.0 i 16V (F68, M68) 08/1992-08/1995

ASTRA G Saloon (T98)

2.0 16V (F69) 09/1998-01/2005

1.8 16V (F69) 09/1998-09/2000

VECTRA B Estate (J96)

2.0 i 16V (F35) 11/1996-06/2000

2.0 i 16V (F35) 11/1996-06/2000

1.8 i 16V (F35) 11/1996-09/2000

2.0 i 16V (F35) 07/2000-07/2003

1.8 i 16V (F35) 11/1996-09/2000

1.8 i 16V (F35) 11/1996-09/2000

SINTRA (APV)

2.2 i 16V (OUN16, Y94) 11/1996-04/1999

ASTRA G Estate (T98)

2.0 16V (F35) 02/1998-07/2004

2.0 OPC (F35) 11/2002-07/2004

2.0 OPC (F35) 09/2002-07/2004

1.8 16V (F35) 02/1998-09/2000

ASTRA G Hatchback (T98)

2.0 16V (F08, F48) 02/1998-01/2005

2.0 16V OPC (F08, F48) 11/1999-09/2002

2.0 OPC (F08, F48) 09/2002-01/2005

2.0 OPC (F08, F48) 11/2002-01/2005

1.8 16V (F08, F48) 02/1998-09/2000

ZAFIRA A MPV (T98)

2.0 OPC (F75) 09/2001-06/2005

2.0 OPC (F75) 11/2002-06/2005

ASTRA G Coupe (T98)

2.0 16V Turbo (F07) 09/2000-08/2001

2.0 16V Turbo (F07) 11/2002-05/2005

2.0 16V Turbo (F07) 08/2001-05/2005

1.8 16V (F07) 03/2000-10/2000

ASTRA G Convertible (T98)

2.0 OPC (F67) 03/2002-10/2005

2.0 16V Turbo (F67) 11/2002-10/2005

SPEEDSTER (E01)

2.0 Turbo (R97) 08/2002-08/2006

FRONTERA B (U99)

2.2 i (6B_ZC, 6B_VF, 6B_66, 6B_76) 10/1998-07/2004

2.2 i (6B_ZC, 6B_VF, 6B_66, 6B_76) 10/1998-07/2004

CHEVROLET

ZAFIRA (F75)

2.0 04/2001-07/2012

2.0 04/2001-07/2012

CAPTIVA (C100, C140)

2.4 06/2006-02/2011

2.4 4WD 06/2006-02/2011

2.4 LPG 4WD 01/2007-02/2011

2.4 LPG 01/2007

CAPTIVA SPORT

2.4 01/2007

LACETTI (J200)

1.8 03/2005

NUBIRA Saloon

1.8 03/2005-12/2009

VAUXHALL

ASTRA Mk V (H) (A04)

2.0 Turbo (L48) 01/2004-05/2009 2.0 Turbo (L48) 01/2004-05/2009

VECTRA (B) Hatchback (J96)

2.0 i 16V (F68) 10/1995-01/2001

ASTRA Mk V (H) Sport Hatch (A04)

2.0 Turbo (L08) 02/2005-11/2010

FRONTERA Mk II (B) (U99)

2.2 i 10/1998-10/2004 2.2 i 10/1998-10/2004

ASTRA Mk III (F) Saloon (T92)

2.0 i 16V 02/1995-09/1998

VECTRA (B) Estate (J96)

2.0 i 16V (F35) 10/1995-01/2001 1.8 i 16V (F35) 11/1996-09/2000

ASTRA Mk III (F) Hatchback (T92)

1.8 i 16V 09/1994-02/1998 2.0 i 16V 01/1994-02/1998

Sintra

2.2 i 16V 09/1996-09/1999

ASTRA Mk III (F) Convertible (T92)

1.8 16V 11/1994-03/2001 1.8 16V 11/1994-03/2001

2.0 i 16V 01/1994-02/1998

VECTRA (B) Saloon (J96)

1.8 i 16V (F19) 10/1995-09/2000 2.0 i 16V (F19) 10/1995-01/2001

ASTRA Mk III (F) Estate (T92)

1.8 i 16V 09/1994-02/1998 2.0 i 16V 01/1994-02/1998

Astra MK IV

2.0 Turbo 16V 03/2000-08/2005

ZAFIRA A (T98)

2.0 GSI Turbo 09/2001-06/2005

Astra F

1.8 i 16V 06/1993-02/1998

Frontera A

2.2 i 4x4 Long 03/1995-10/1998

VX220 Convertible (E01)

2.0 i Turbo 03/2001-07/2005

Astra MK III

1.8 i 16V 01/1994-12/1996

OMEGA (B) Estate (V94)

2.2 16V 02/1994-06/2003 2.2 16V 02/1994-06/2003

OMEGA (B) Saloon (V94)

2.2 16V 01/1994-06/2003 2.2 16V 01/1994-06/2003

CALIBRA (C89)

2.0 i 16V 4x4 02/1994-07/1997 2.0 i 16V 06/1990-07/1997

Omega

2.0 16V 09/1993-09/1999

CAVALIER Mk III Hatchback (J89)

2.0 i 16V 09/1992-08/1995

Astra G

2.0 16V 09/1997-12/2005

ASTRA Mk IV (G) Hatchback (T98)

2.0 16V (F08) 02/1998-05/2005

ASTRA Mk IV (G) Convertible (T98)

2.0 Turbo 03/2002-10/2005

ASTRA Mk IV (G) Saloon (T98)

2.0 16V 09/1998-05/2005

DAEWOO

NUBIRA (J100)

2.0 16V 05/1997 2.0 CDX 08/2002-07/2003

NUBIRA (J150)

2.0 16V 06/1999-07/2002

LACETTI Hatchback (KLAN)

1.8 02/2004

NUBIRA Saloon (J100)

2.0 06/1999-07/2003 2.0 16V 05/1997 1.8 16V 04/1997-05/1999

NUBIRA Saloon (J150)

2.0 16V 06/1999-07/2002

ESPERO (KLEJ)

1.8 02/1995-06/1999 1.8 02/1995-09/1999 2.0 02/1995-06/1999

LEGANZA (KLAV)

2.0 16V 06/1997-12/2002 2.2 16V 04/1999-12/2002

NUBIRA Wagon (J100)

2.0 16V 05/1997

REZZO (U100)

2.0 09/2000 2.0 09/2001-12/2004

EVANDA (KLAL)

2.0 08/2002

NUBIRA Estate (J150)

2.0 16V 06/1999-07/2002

NUBIRA Saloon (J200)

1.8 07/2003

NUBIRA Wagon (J200)

1.8 07/2003