SINTLY

SINTLY | STARTER MOTOR **XTLSTR0066**

VOLTAGE **12** V

POWER **1.40** kW

APPLICATIONS CHRYSLER, MERCEDES-BENZ

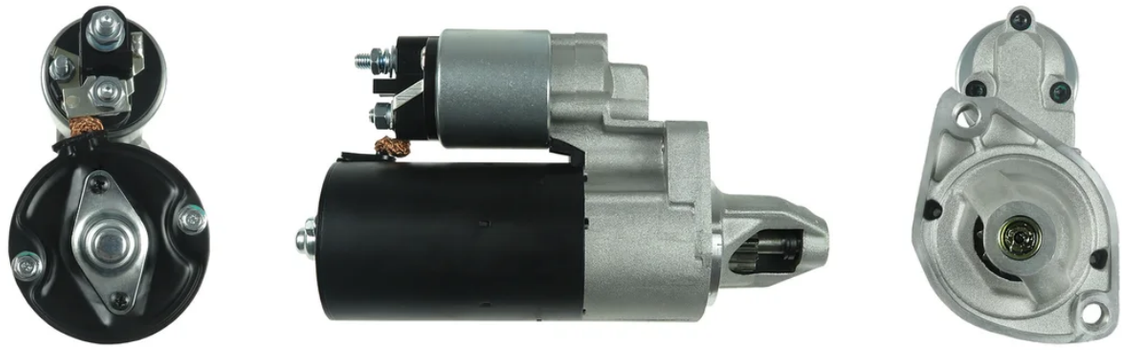

DIMENSIONS

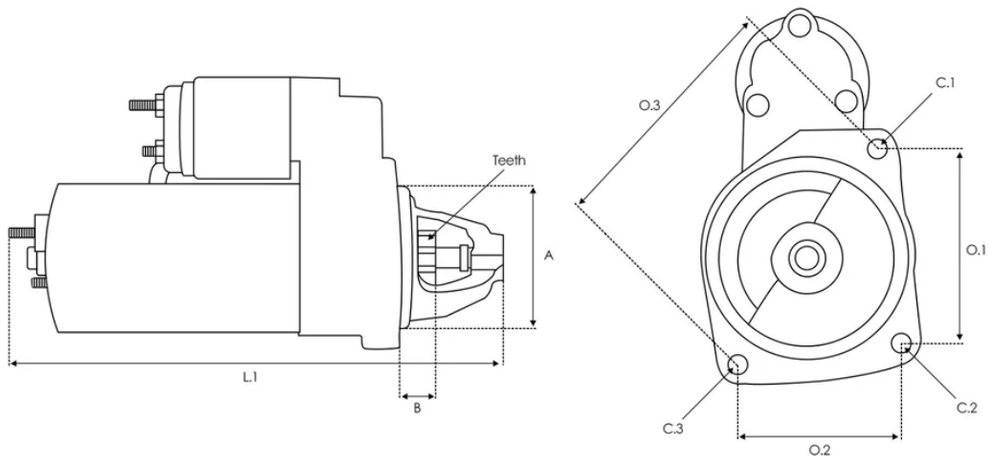

A **60.00 mm** B **26.50 mm** Teeth **10 qty.** L.1 **247.00 mm** O.1 **89.00 mm** C.1 **M10x1.5 mm** C.2 **M10x1.5 mm**

Números OE

Other	0001108197

Código equivalente

3EFFE	PRSS753 STRS753
A.Z. MEISTERTEILE	AZMT-53-010-1374

ACAUTO	AC-CBS1249 AC-CBS5889
AIRSTAL	30-0259
ALANKO	10439471 10441170
ANDEL	ANM16049 ANM16049X
AS-PL	S0136
ATL AUTOTECHNIK	A21280 A21310
AUTOELECTRO	AEU1072
BORG & BECK	BST2087
BOSCH	0001107461 0001108250 0001108403 0001108404 0001108409 0001108410 0986019500 0986021280 0986021310 1986S00678
BOVEZ	STA0350R
BTS TURBO	S100086 S101171
CARGO	113282 F032113282
CARWOOD GROUP	BREF0320986021280 BREF032113282 BREF0321986S00678
CASCO	CST10315GS

CEVAM	3027
CHRYSLER	05097072AA 05097072AC 5097072AA 5097072AC
COMLINE	CMA-621594 CST0496
DA SILVA	020487
DELCO	DRS3829 DRT1280
DRI	325032102
DTS	S-50081
EAI	12088
ELECTROLOG	STR1287 STR1451
ELSTOCK	25-3046
ERA	220709 220709A 220709R 221251A
EUROTEC	11021280 11021310
FARCOM	106184 106187
FREY	728101201
FRIESEN	8019500 8021280 8021310
GHIBAUDI	SG0851 SG0851RB

HC PARTS	CS1249
HELLA	8EA011612-681 8EA737940-001
HENKEL PARTS	3120008 3120029 3120030 3120031
HERTH+BUSS	42019500 42021280
HOFFER	H5010368 H5010368G
IKA	6.7090.1
ISKRA / LETRIKA	11.139.431 AZE2199 IS9424
ITAB AUTOMOTIVE	10010315OV
KRAUF	STB1249
KUHNER	101249 101249B 101249S 101249V
LAUBER	22.1249
LOGISTIK	331374
LUCAS	LRS01552 LRS1552
MAGNETI MARELLI	063521084030 944280212800 MRS21280 MSN2202
MAHLE	72735799 MS171

MAPCO	13896
MEAT & DORIA	5010368 5010368G
MERCEDES	0051516501 005151650180 005151650183 0061510501 006151050180 0061513701 006151370180 A0051516501 A005151650180 A005151650183 A0061510501 A006151050180 A0061513701 A006151370180
POWERMAX	8213003 88213003
PRESTOLITE	20513062
PROTECH	IR9494
QUINTON HAZELL	QRS1234
REAL	20401513OE
REMANTE	011-001-000264R
RIDEX	2S0408 2S0408R
ROLLCO	STM622
SANDO	6010315.1
SIDAT	S12BH0149 S12BH0149A2 S12BH0472A2
SIOM	MAV123150

SNRA	ME9032
STARDAX	STX200324R
STARK	SKSTR-0330407
STARTCAR	088ST21
TESLA TECHNICS	TT15303 TT15303PRO
THE NEWLINE	RE83512N
TMI	ST01139
TRISCAN	830510037
TURBO-TEC	TTST001397
VALEO	438489 458870
VEMO	V30-12-07461
WAI	17852N 550.521.102.010 550.521.102.210 550.521.102.215 550.521.102.280 550.521.102.440 550.530.102.010 550.530.102.280 S133.310 S145.424 S148.924
WALKER	WST00368
WILMINK GROUP	WG2471106 WG2656590
WILSON	91-15-7220 91-15-7220N 91-15-7225

91-15-7225N

WOODAUTO STR50081 WOOSTR50081

Aplicaciones

MERCEDES-BENZ

S-CLASS (W221, V221)

S 400 Hybrid (221.095, 221.195) 01/2009-12/2013

S 350 (221.056, 221.156) 10/2005-12/2013

S 500 (221.071, 221.171) 10/2005-12/2013

S 500 4-matic (221.086, 221.186) 10/2005-12/2013

S 450, S 450 L (221.070, 221.170) 12/2005-12/2013

S 500 4-matic (221.086, 221.186) 10/2005-12/2013

S 450 4-matic (221.084, 221.184) 12/2005-12/2013

S 350 4-matic (221.087, 221.187) 02/2008-12/2013

S 300 (221.054, 221.154) 08/2006-12/2013

S 280 (221.054) 08/2006-12/2013

E-CLASS (W212)

E 300 (212.054) 01/2009-12/2013

E 350 CGI (212.057) 01/2009-08/2011

E 350 CGI (212.057) 01/2009-08/2011

E 350 4-matic (212.087) 01/2009-08/2011

E 500 (212.072) 01/2009-12/2011

E 500 4-matic (212.090) 01/2009-12/2011

E 350 (212.056) 01/2009-12/2013

E 250 (212.052) 05/2009-12/2011

SL (R129)

320 (129.064) 05/1998-10/2001

500 (129.068) 05/1998-10/2001

280 (129.059) 05/1998-10/2001

GLK-CLASS (X204)

350 (204.956) 04/2009-06/2015

280 4-matic (204.981) 06/2008-06/2009

350 4-matic (204.987) 06/2008-04/2011

G-CLASS Cabrio (W463)

G 320 (463.209, 463.250) 11/1997-08/2004

G 500 (463.202) 12/2009-08/2014

G 500 (463.202) 12/2009-08/2014

C-CLASS (W202)

C 280 (202.029) 06/1997-05/2000

C 240 (202.026) 06/1997-05/2000

C 280 (202.028) 05/1993-05/2000

G-CLASS (W463)

G 320 (463.232, 463.233, 463.244, 463.245) 07/1997-08/2004

G 500 (463.222, 463.236, 463.237, 463.242) 05/2008-08/2015

G 500 (463.222, 463.236, 463.237, 463.242) 05/2008-08/2015

G 500 (463.234, 463.239) 06/2015-04/2018

E-CLASS T-Model (S212)

E 350 (212.256) 08/2009-12/2011

E 500 (212.272) 11/2009-12/2011

E 350 CGI (212.257) 11/2009-12/2011

E 350 4-matic (212.287) 11/2009-12/2011

E 300 (212.254) 11/2009-12/2011

C-CLASS T-Model (S202)

C 240 T (202.086) 06/1997-09/2000

C 240 T (202.088) 09/2000-03/2001

C 280 T (202.089) 06/1997-03/2001

E-CLASS Convertible (A207)

E 350 (207.456) 03/2010-12/2011

E 350 (207.456) 03/2010-12/2011

E 350 CGI (207.457) 01/2010-12/2014

E 500 (207.472) 01/2010-12/2011

E 350 CGI (207.457) 01/2010-12/2014

E-CLASS (W211)

E 320 (211.065) 03/2002-12/2008

E 320 4-matic (211.082) 03/2003-12/2008

E 280 4-matic (211.092) 01/2006-12/2008

E 280 4-matic (211.092) 01/2006-12/2008

E 350 4-matic (211.087) 03/2005-12/2008

E 350 (211.056) 03/2005-12/2008

E 280 (211.054) 03/2005-12/2008

E 350 CGI (211.057) 09/2007-12/2008

E 230 (211.052) 09/2007-12/2008

E 63 AMG (211.077) 03/2006-12/2008

E 500 4-matic (211.090) 04/2006-12/2008

E 500 (211.072) 04/2006-12/2008

E 63 AMG (211.077) 09/2006-12/2008

E 240 (211.061) 03/2002-12/2008

E 240 (211.061) 03/2002-12/2008

E 240 4-matic (211.080) 03/2003-12/2008

E-CLASS Coupe (C207)

E 350 (207.356) 01/2010-12/2011

E 350 (207.356) 01/2010-12/2011

E 350 CGI (207.357) 01/2009-12/2011

E 500 (207.372) 01/2009-12/2016

E 350 CGI (207.357) 01/2009-12/2011

M-CLASS (W163)

ML 55 AMG (163.174) 02/2000-06/2005

ML 320 (163.154) 02/1998-08/2002

ML 500 (163.175) 09/2001-06/2005

ML 500 (163.175) 09/2001-06/2005

ML 350 (163.157) 08/2002-06/2005

ML 350 02/2003-06/2005

C-CLASS T-Model (S203)

C 350 (203.256) 01/2005-08/2007

C 280 (203.254) 01/2005-08/2007

C 350 4-matic (203.287) 01/2005-08/2007

C 280 4-matic (203.292) 01/2005-08/2007

C 230 (203.252) 01/2005-08/2007

C 32 AMG Kompressor (203.265) 03/2001-08/2007

C 240 (203.261) 03/2001-08/2007

C 320 (203.264) 03/2001-08/2007

C 320 4-matic (203.284) 07/2002-08/2007

C 240 4-matic (203.281) 07/2002-08/2007

GL-CLASS (X164)

GL 450 4-matic (164.871) 09/2006-08/2012

GL 500 4-matic (164.886) 09/2006-12/2012

CLK Convertible (A209)

CLK 280 (209.454) 01/2005-03/2010

CLK 350 (209.456) 01/2005-03/2010

CLK 500 (209.472) 06/2006-03/2010

CLK 240 (209.461) 02/2003-03/2010

CLK 320 (209.465) 02/2003-03/2010

E-CLASS T-Model (S211)

E 320 T (211.265) 03/2003-07/2009

E 350 T 4-matic (211.287) 03/2005-07/2009

E 320 T 4-matic (211.282) 07/2003-07/2009

E 280 T (211.254) 03/2005-07/2009

E 350 T (211.256) 03/2005-07/2009

E 280 T 4-matic (211.292) 03/2005-07/2009

E 280 T 4-matic (211.292) 03/2005-07/2009

E 500 T (211.272) 04/2006-07/2009

E 230 T (211.252) 05/2007-07/2009

350 CGI (211.257) 05/2006-07/2009

E 500 T 4-matic (211.290) 04/2006-07/2009

E 240 T 4-matic (211.280) 07/2003-07/2009

E 240 T (211.261) 03/2003-07/2009

M-CLASS (W164)

ML 350 4-matic (164.186) 02/2005-12/2011

ML 500 4-matic (164.172) 12/2007-12/2011

C-CLASS Coupe (CL203)

C 230 (203.752) 01/2005-05/2008

C 350 (203.756) 01/2005-05/2008

C 320 (203.764) 09/2002-05/2008

C 32 AMG Kompressor (203.765) 05/2002-05/2008

C-CLASS (W203)

C 350 4-matic (203.087) 01/2005-02/2007

C 350 (203.056) 01/2005-02/2007

C 280 4-matic (203.092) 01/2005-02/2007

C 350 4-matic (203.087) 01/2005-02/2007

C 230 (203.052) 01/2005-02/2007

C 240 (203.061) 05/2000-02/2007

C 320 (203.064) 05/2000-02/2007

C 32 AMG Kompressor (203.065) 02/2001-02/2007

C 240 4-matic (203.081) 07/2002-02/2007

C 280 (203.054) 01/2005-02/2007

C 320 4-matic (203.084) 07/2002-02/2007

SLK (R171)

280 (171.454) 01/2005-02/2011

350 (171.456) 06/2004-02/2011

300 (171.454) 04/2009-02/2011

350 (171.458) 01/2008-02/2011

SL (R230)

500 (230.471) 03/2006-01/2012

350 (230.456) 03/2006-01/2012

350 (230.467) 03/2003-01/2012

350 (230.458) 04/2008-01/2012

280 (230.454) 03/2008-01/2012

300 (230.454) 04/2009-01/2012

S-CLASS (W220, V220)

S 350, S 350 L (220.067, 220.167) 09/2002-08/2005

S 350 4-matic (220.087, 220.187) 06/2003-08/2005

S 320 (220.065, 220.165) 10/1998-08/2005

S 280 (220.063, 220.163) 10/1998-08/2005

S 55 AMG (220.073, 220.173) 04/1999-08/2005

S 320 CDI (220.026, 220.126) 08/1999-09/2002

CLK (C209)

CLK 350 (209.356) 01/2005-05/2009

CLK 280 (209.354) 01/2005-05/2009

CLK 500 (209.372) 06/2006-05/2009

CLK 320 (209.365) 06/2002-05/2009

CLK 240 (209.361) 06/2002-05/2009

CLS (C219)

CLS 350 (219.356) 10/2004-12/2010

CLS 300 (219.354) 04/2009-12/2010

CLS 500 (219.372) 04/2006-12/2010

CLS 280 (219.354) 07/2008-12/2010

CLS 350 (219.357) 04/2006-12/2010

R-CLASS (W251, V251)

R 350 4-matic (251.065, 251.165) 07/2005-12/2012

R 280 (251.054, 251.154) 01/2007-12/2014

R 280 4-matic (251.062) 05/2007-12/2011

R 350 (251.056, 251.156) 01/2007-12/2012

R 500 4-matic (251.072, 251.172) 05/2007-12/2014

R 300 (251.054, 251.154) 07/2009-12/2014

R 300 4-matic (251.062) 07/2009-12/2011

R 350 CGI 4-matic (251.057, 251.157) 10/2011-12/2014

R 350 CDI 4-matic (251.124, 251.125) 01/2006-12/2014

R 350 CDI 4-matic (251.124, 251.125) 01/2006-12/2014

R 350 CDI 4-matic (251.022, 251.122) 07/2009-12/2012

C-CLASS (W204)

C 280 4-matic (204.081) 07/2007-01/2014

C 230 (204.052) 01/2007-01/2014

C 350 4-matic (204.087) 07/2007-01/2014

C 350 (204.056) 01/2007-01/2014

C 350 CGI (204.065) 09/2008-01/2014

C 230 4-matic (204.085) 07/2007-01/2014

C 300 4-matic (204.081) 07/2007-01/2014

C 300 (204.054) 07/2009-01/2014

C 280 (204.054) 01/2007-01/2014

C 350 (204.057) 01/2011-01/2014

C-CLASS T-Model (S204)

C 350 (204.256) 08/2007-08/2014

C 280 (204.254) 08/2007-08/2014

C 230 (204.252) 08/2007-08/2014

C 300 (204.254) 08/2007-08/2014

C 250 (204.252) 02/2008-12/2012

S-CLASS Coupe (C216)

CL 500 (216.371) 06/2006-12/2013

CL 500 4-matic (216.386) 02/2008-12/2013

VITO Bus (W639)

126 (639.701, 639.703, 639.705) 09/2007

123 (639.701, 639.703, 639.705) 06/2004-07/2008

122 (639.701, 639.703, 639.705) 09/2003

123 (639.701) 06/2004-07/2008

119 (639.701, 639.703, 639.705) 09/2003

CLC-CLASS (CL203)

CLC 230 (203.752) 05/2008-06/2011

CLC 350 (203.756) 05/2008-06/2011

CLC 250 06/2009-06/2011

VITO / MIXTO Van (W639)

123 (639.601) 06/2004-07/2008

122 (639.601, 639.603, 639.605) 09/2003

119 (639.601, 639.603, 639.605) 09/2003

126 (639.601, 639.603, 639.605) 09/2007

123 (639.601, 639.603, 639.605) 06/2004-07/2008

VIANO (W639)

3.5 (639.811, 639.813, 639.815) 09/2007

3.7 (639.811, 639.813, 639.815) 06/2004-07/2007

3.7 (639.815) 06/2004

3.2 (639.711, 639.811, 639.813) 09/2003

3.2 (639.713, 639.813, 639.815) 09/2003

GL-CLASS (X166)

GL 63 AMG 4-matic (166.874) 07/2012-10/2015

E-CLASS (W210)

E 280 4-matic (210.081) 12/1996-03/2002

E 320 4-matic (210.082) 06/1997-03/2002

E 320 (210.065) 06/1997-03/2002

E 240 (210.061) 06/1997-08/2000

E 240 (210.062) 08/2000-03/2002

E 430 4-matic (210.083) 05/1999-03/2002

E 280 (210.063) 12/1996-03/2002

E 430 (210.070) 06/1997-03/2002

E-CLASS T-Model (S210)

E 320 T (210.265) 12/1996-03/2003

E 240 T (210.261) 06/1997-03/2003

E 320 T 4-matic (210.282) 12/1996-03/2003

E 280 T 4-matic (210.281) 12/1996-03/2003

E 240 T (210.262) 08/2000-03/2003

E 280 T (210.263) 12/1996-03/2003

E 320 T CDI (210.226) 07/1999-03/2003

CLK Convertible (A208)

CLK 320 (208.465) 03/1998-03/2002

CLK (C208)

CLK 320 (208.365) 06/1997-06/2002

SLK (R170)

32 AMG Kompressor (170.466) 03/2001-04/2004

320 (170.465) 03/2000-04/2004

E-CLASS Platform/Chassis (VF210)

E 280 (210.663) 07/1999-11/2002

CHRYSLER

CROSSFIRE

SRT-6 09/2004-12/2007

3.2 07/2003-12/2008

CROSSFIRE Roadster

3.2 05/2004-12/2008

SRT-6 09/2004-12/2006