SINTLY

SINTLY | STARTER MOTOR **XTLSTR0086**

VOLTAGE **12** V

POWER **1.40** kW

APPLICATIONS DAEWOO, MERCEDES-BENZ, PUCH, SSANGYONG, VW

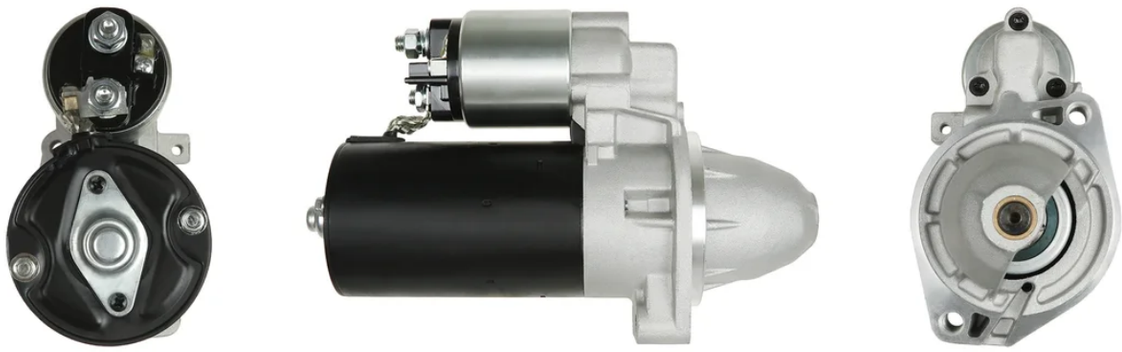

DIMENSIONS

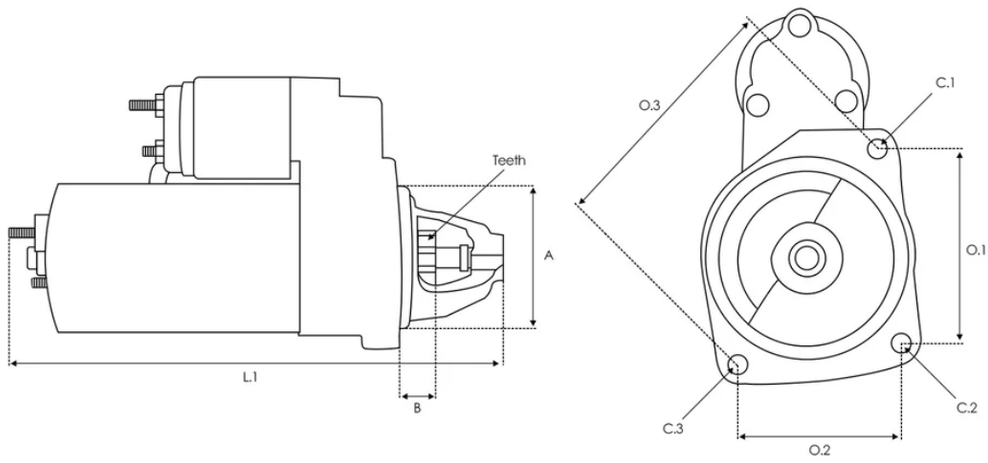

A **82.50 mm** B **26.00 mm** Teeth **9 qty.** L.1 **243.00 mm** O.1 **105.00 mm** C.1 **M10x1.5 mm** C.2 **M10x1.5 mm**

Números OE

Other	0001108003

Código equivalente

3EFFE	PRSL005 STRL005 STRS043
ACAUTO	AC-CBS0268 AC-CBS1075

AINDE	AI-80009
ALANKO	10439697 10440496 11439697 11440496
ANDEL	ANM15230 ANM15230X ANM18600 ANM18600X
APEC	ASM1272
AS-PL	S0382
ATL AUTOTECHNIK	A13010
AUTOELECTRO	AES1185 AES6155
AUTOTEAM	SBO141 SBO141A
BORG & BECK	BST2158 BST2162
BOSCH	0001107037 0001107048 0001107072 0001107096 0001107403 0001107403-R 0001107416 0001108008 0001108120 0001108124 0001108149 0001111010 0001111143 0001314036 0986013010 0986016380 0986018850 1005821056 1005821738 1986S00669
BOVEZ	STA0163R STA0545R
BTS TURBO	S104856
CARGO	110862 111347 F032110862 F032111347

CARWOOD GROUP	BREF0320986013010 BREF0320986018850 BREF032111347 BREF0321986S00669
CASCO	CST10141AS CST10141GS
CEVAM	3202 3563
DA SILVA	026003
DAF	1516657R 1516718R
DELCO	DRS3010 DRS8850
DRI	325017092 325023092
DT SPARE PARTS	4.67723
EAI	11276 11809
ELECTROLOG	STR10154 STR1140 STR1452
ELSTOCK	25-0409 25-2098
ERA	220060 220062 220062A
EUROREPAR	1638131680
EUROTEC	11013010 11018850
FRANKBERG	5481FB0020365

FRIESEN	8013000 8013010 8016380
HC PARTS	CS1075 CS268 CS327
HELLA	8EA011610-341 8EA012527-271 8EA737488-001
HENKEL PARTS	3119974
HERTH+BUSS	42016380 42314027
HOFFER	H5010990 H5010990G
ISKRA / LETRIKA	IS9307
ITAB AUTOMOTIVE	10010141AV 10010141OV
KRAUF	STB1075
KUHNER	101075 101075B 101075S 101075V 10327B
LAUBER	22.0327 22.1075 22.1075M
LE PART	LES0338
LOGISTIK	330479 331227
LUCAS	LRS00185 LRS00655 LRS185 LRS655
MAGNETI MARELLI	063521074030 063721075010 63111023 63111043 943251694 943251694010 943289100 944280130100 MRS13010

	MSN2074 MSR505
MAHLE	MS421
MEAT & DORIA	5010990 5010990G 5015281
MERCEDES	0011516901 0021519301 002151930180 0031510001 003151000180 0031512801 003151280180 0031513801 003151380180 004151060180 0041514601 004151460180 0041516401 004151640180 0041516901 004151690180 0041518101 004151810180 0051510601 005151060180 0051513401 005151340180 0051513601 0051514601 0051515301 0051517301 1510100469 1611513001 1611513301 A0011516901 A0021519301 A002151930180 A0031510001 A003151000180 A0031512801 A003151280180 A0031513801 A003151380180 A004151060180 A0041514601 A004151460180 A0041516401 A004151640180 A0041516901 A004151690180 A0041518101 A004151810180 A0051510601 A005151060180 A0051513401 A005151340180 A0051513601 A0051514601 A0051515301 A0051517301 A1510100469 A1611513001 A1611513301
MTR	13047883
NAPA	NPANSM1272
OSSCA	02239
POWERMAX	8212882 8213281 88213281

PRESTOLITE	20500185 S1007B S1016B S1017B
PROTECH	IR8340
REAL	20401141BN 20401141OE
REMANTE	011-001-000363R
RIDEX	2S0032 2S0032R
RNL	RNL1638 RNL1885
ROLLCO	STM762
SANDO	6010141.0 6010141.1 6010141BN 6010141OE
SIDAT	S12BH0118 S12BH0272A2 S12VA0118A2
SIOM	MAV171070 MAV3080 MAV3080A
SNRA	ME9002 ME9005
SOVEREIGN	SS394 SS398
STARDAX	STX200202 STX200202R
STARTCAR	276ST11 809ST11
TESLA TECHNICS	TT15226 TT15226PRO
TMI	ST00241 ST00772

VALEO	436603 455947 D6RA168
VEMO	V30-12-16380
VW	069911023G 069911023GX 100911023G 100911023GX
WAI	17039N 17730N 550.507.092.000 550.507.092.010 550.507.092.018 550.507.092.210 550.507.092.211 550.507.092.215 550.507.092.280 550.507.092.500 550.507.092.505 550.510.092.010 550.510.092.440 S133.139 S145.001
WALKER	WST00490
WILMINK GROUP	WG2196698 WG2315446
WILSON	91-15-6908 91-15-7135 91-15-7135N
WOODAUTO	STR50421 STR54010 WOOSTR50421 WOOSTR54010

Aplicaciones

MERCEDES-BENZ

G-CLASS (W460)

230 GE (460,2) 05/1987-08/1992

230 GE (460,2) 04/1982-08/1992

230 GE (460,2) 04/1982-08/1992

230 GE (460,2) 05/1987-08/1992

230 GE (460,2) 04/1982-08/1992

230 G (460,2) 03/1979-07/1993

250 GD (460,3) 12/1988-08/1992

G-CLASS (W463)

200 GE (463.220) 01/1990-07/1993

300 GE (463.227, 463.228) 06/1990-08/1997

300 GE (463.227, 463.228) 09/1989-08/1993

230 GE (463.224, 463.225) 06/1990-06/1993

123 Saloon (W123)

200 (123.220) 06/1980-11/1985

200 06/1980-11/1985

230 E (123.223) 04/1980-12/1985

G-CLASS (W461)

230 GE (461) 06/1993-07/2000

230 GE (461) 06/1993-07/2000

230 GE (461.238, 461.239) 09/1989-07/1996

123 T-Model (S123)

230 TE (123.283) 04/1980-11/1985

200 T 11/1980-11/1985

200 T (123.280) 11/1980-11/1985

123 Coupe (C123)

230 CE (123.243) 04/1980-12/1985

T2/L Platform/Chassis

L 410 (309.000, 309.002) 08/1982-12/1988

T2/L Van

L 410 (309.011, 309.012, 309.013, 309.014, 309.015,... 08/1982-12/1988

G-CLASS Cabrio (W460)

230 GE (460.218, 460.249) 07/1982-05/1993

230 GE (460.218, 460.249) 08/1986-05/1993

250 GD (460.317) 10/1987-10/1991

230 GE (460.218, 460.249) 08/1986-05/1993

O 309

O 309 B 01/1968-02/1989

190 (W201)

E 2.5-16 Evolution II 05/1990-08/1993

E 2.3-16 09/1985-12/1987

E 2.3-16 (201.034) 04/1984-01/1987

E 2.3-16 09/1985-08/1988

E 2.3 (201.028) 10/1986-08/1993

E 2.5-16 (201.035) 09/1988-08/1993

E 2.5-16 Evolution (201.036) 03/1989-08/1993

E 2.3 09/1986-08/1991

E 2.5-16 Evolution (201.036) 03/1989-08/1993

2.0 (201.022) 10/1982-10/1984

2.3 09/1987-09/1988

E 2.5-16 (201.035) 03/1989-08/1993

E 1.8 (201.018) 04/1990-08/1993

E 2.0 (201.024) 10/1982-06/1993

E 2.0 01/1985-08/1993

2.0 (201.023) 01/1986-05/1990

E 2.0 (201.024) 02/1985-12/1986

E 2.0 (201.024) 10/1982-06/1993

2.0 (201.023) 08/1983-05/1990

E 2.0 (201.024) 02/1985-12/1986

E 2.6 09/1986-12/1989

E 2.6 (201.029) 09/1986-08/1993

124 Saloon (W124)

200 (124.020) 01/1986-05/1990

200 01/1986-10/1992

200 (124.020) 12/1985-05/1990

300 E 01/1985-12/1985

200 E (124.021) 09/1988-12/1989

230 E (124.023) 01/1985-06/1993

200 E (124.019) 10/1992-06/1993

220 E (124.022) 10/1992-06/1993

200 E (124.021) 09/1988-08/1993

230 E (124.023) 12/1984-03/1992

230 E Cat (124.023) 06/1989-06/1993

124 T-Model (S124)

200 T (124.080) 01/1986-05/1990

200 T (124.080) 09/1985-08/1989

230 TE (124.083) 09/1985-08/1992

230 TE Cat (124.083) 06/1989-08/1992

200 TE (124.081) 09/1988-08/1992

200 TE 09/1988-12/1989

220 TE (124.082) 10/1992-05/1993

200 TE (124.079) 05/1986-06/1993

C-CLASS (W202)

C 180 (202.018) 03/1993-05/2000

C 220 (202.022) 03/1993-05/2000

C 180 (202.018) 03/1993-05/2000

C 180 (202.018) 11/1994-05/2000

C 230 Kompressor (202.024) 10/1995-05/2000

C 200 (202.020) 01/1994-05/2000

C 200 Kompressor (202.025) 10/1995-05/2000

C 180 (202.018) 11/1994-05/2000

C 200 (202.020) 01/1994-05/2000

C 230 (202.023) 06/1996-06/1997

C 200 Kompressor (202.025) 11/1996-05/2000

124 Coupe (C124)

230 CE Cat (124.043) 06/1989-12/1992

230 CE (124.043) 03/1987-12/1992

220 CE (124.042) 10/1992-05/1993

200 CE (124.041) 03/1990-12/1992

200 CE (124.040) 07/1992-07/1993

E-CLASS (W124)

E 220 (124.022) 06/1993-06/1995

E 200 (124.019) 06/1993-06/1995

E 500 (124.036) 06/1993-06/1995

E-CLASS T-Model (S124)

E 200 T (124.079) 06/1993-06/1996

E 220 T (124.082) 06/1993-06/1996

E-CLASS Coupe (C124)

E 200 (124.040) 06/1993-06/1997

E 220 (124.042) 06/1993-06/1997

T1 Bus (B601)

210 2.3 05/1989-02/1996

208 2.3 05/1977-12/1982

210 2.3 07/1982-01/1990

208 2.3 05/1977-12/1982

T1 Van (601, 611)

210 2.3 05/1989-02/1996

210 2.3 07/1982-02/1996

210 2.3 07/1982-02/1996

T1 Platform/Chassis (B602)

310 2.3 01/1982-12/1994

T1 Platform/Chassis (601)

210 2.3 04/1977-10/1989

210 2.3 04/1977-10/1989

G-CLASS Cabrio (W463)

230 GE (463.204) 06/1990-02/1993

SLK (R170)

200 Kompressor (170.445) 10/1996-03/2000

230 Kompressor (170.447) 09/1996-03/2000

230 Kompressor (170.449) 03/2000-04/2004

200 Kompressor (170.444) 03/2000-04/2004

200 (170.435) 09/1996-03/2000

C-CLASS Coupe (CL203)

C 180 (203.735) 03/2001-05/2002

C 200 Kompressor (203.745) 03/2001-05/2002

C 230 Kompressor (203.747) 03/2001-05/2002

C 220 CDI (203.706) 03/2001-01/2004

CLK Convertible (A208)

CLK 230 Kompressor (208.448) 06/2000-03/2002

CLK 200 Kompressor (208.444) 06/2000-03/2002

CLK 200 (208.435) 03/1998-03/2002

CLK 200 (208.435) 03/1998-03/2002

CLK 200 Kompressor (208.445) 03/1998-06/2000

CLK 230 Kompressor (208.447) 03/1998-06/2000

CLK 230 Kompressor (208.447) 03/1998-06/2000

C-CLASS (W203)

C 180 (203.035) 10/2000-05/2002

C 200 Kompressor (203.045) 05/2000-06/2002

C 180 Kompressor (203.046) 05/2002-02/2007

C 220 CDI (203.006, 203.008) 05/2000-02/2007

C 220 CDI (203.006, 203.008) 05/2000-02/2007

C-CLASS T-Model (S203)

C 180 (203.235) 03/2001-05/2002

C 200 Kompressor (203.245) 03/2001-05/2002

T2/LN1 Platform/Chassis

510 (667.001, 667.002) 04/1986-12/1994

T1/TN Van

410 (611.067, 611.068) 08/1982-06/1995

410 (611.067, 611.068) 08/1982-06/1995

T1/TN Platform/Chassis

410 (611.017, 611.018) 08/1982-06/1995

410 (611.017, 611.018) 08/1982-06/1995

T2/LN1 Van

510 (667.061, 667.062) 04/1986-12/1994

T1 Van (B602)

310 2.3 01/1989-12/1995

310 2.3 06/1989-02/1996

E-CLASS Convertible (A124)

E 200 (124.060) 06/1993-03/1998

E 220 (124.062) 06/1993-03/1998

E-CLASS (W210)

E 230 (210.037) 06/1995-06/1997

E 200 (210.035) 06/1995-08/2000

E 200 Kompressor (210.045) 06/1997-03/2002

E 200 Kompressor (210.048) 08/2000-03/2002

C-CLASS T-Model (S202)

C 180 T (202.078) 06/1996-09/2000

C 200 T (202.080) 06/1996-03/2001

C 180 T (202.078) 06/1996-09/2000

C 200 T (202.080) 06/1996-03/2001

C 200 T Kompressor (202.082) 11/1996-03/2001

C 230 T Kompressor (202.085) 06/1997-09/2000

C 230 T (202.083) 06/1996-06/1998 C 180 T (202.081) 09/2000-03/2001

C 200 T Kompressor (202.087) 09/2000-03/2001

VITO Bus (W638)

113 2.0 (638.114, 638.194) 02/1996-07/2003

113 2.0 (638.114, 638.194) 02/1996-07/2003

114 2.3 (638.134, 638.194) 12/1996-07/2003

114 2.3 (638.134, 638.194) 12/1996-07/2003

112 CDI 2.2 (638.194) 03/1999-07/2003

108 CDI 2.2 (638.194) 03/1999-07/2003

110 CDI 2.2 (638.194) 03/1999-07/2003

E-CLASS T-Model (S210)

E 200 T (210.235) 06/1996-08/2000 E 230 T (210.237) 06/1996-06/1997

E 200 T Kompressor (210.245) 06/1997-03/2003

E 200 T Kompressor (210.248) 08/2000-03/2003

SPRINTER 2-t Bus (B901, B902)

214 (902.071, 902.072, 902.671, 902.672) 02/1995-05/2006

214 (902.071, 902.072, 902.671, 902.672) 02/1995-05/2006

214 NGT (902.072, 902.671, 902.672) 02/1995-05/2006

214 NGT (902.072, 902.671, 902.672) 02/1995-05/2006

SPRINTER 2-t Van (B901, B902)

214 (901.061, 901.062, 901.661, 901.662, 902.061,... 02/1995-05/2006

214 (901.061, 901.062, 901.661, 901.662, 902.061,... 02/1995-05/2006

214 NGT (901.661, 902.061, 902.062, 902.661, 902.662) 02/1995-05/2006

214 NGT (901.661, 902.061, 902.062, 902.661, 902.662) 02/1995-05/2006

CLK (C208)

CLK 230 Kompressor (208.347) 06/1997-06/2000

CLK 200 (208.335) 06/1997-06/2002

CLK 200 Kompressor (208.345) 06/1997-06/2000

CLK 230 Kompressor (208.347) 06/1997-06/2000

CLK 200 Kompressor (208.344) 06/2000-06/2002

CLK 230 Kompressor (208.348) 06/2000-06/2002

SPRINTER 3-t Bus (B903)

314 (903.071, 903.072, 903.073, 903.671, 903.672,... 02/1995-05/2006

314 (903.071, 903.072, 903.073, 903.671, 903.672,... 02/1995-05/2006

314 NGT (903.072, 903.671, 903.672) 02/1995-05/2006

314 NGT (903.072, 903.671, 903.672) 02/1995-05/2006

314 4x4 (903.672, 903.673) 02/1995-05/2006

314 4x4 (903.672, 903.673) 02/1995-05/2006

V-CLASS (638/2)

V 200 (638.214, 638.294) 02/1997-07/2003

V 230 (638.234, 638.294) 10/1996-07/2003

V 230 (638.234, 638.294) 10/1996-07/2003

V 200 (638.214, 638.294) 02/1997-07/2003

V 200 CDI (638.294) 03/1999-07/2003

V 220 CDI (638.294) 03/1999-07/2003

SPRINTER 2-t Platform/Chassis (B901, B902)

214 (902.011, 902.012, 902.611, 902.612) 02/1995-05/2006

214 (902.011, 902.012, 902.611, 902.612) 02/1995-05/2006

214 NGT (902.012, 902.611, 902.612) 02/1995-05/2006

214 NGT (902.012, 902.611, 902.612) 02/1995-05/2006

SPRINTER 3-t Van (B903)

314 (903.061, 903.062, 903.063, 903.661, 903.662) 02/1995-05/2006

314 (903.061, 903.062, 903.063, 903.661, 903.662) 02/1995-05/2006

314 NGT (903.661, 903.061, 903.062, 903.063, 903.662) 02/1995-05/2006

314 NGT (903.661, 903.061, 903.062, 903.063, 903.662) 02/1995-05/2006

314 4x4 (903.661, 903.662, 903.663) 02/1995-05/2006

314 4x4 (903.661, 903.662, 903.663) 02/1995-05/2006

M-CLASS (W163)

ML 230 (163.136) 02/1998-06/2005

SPRINTER 3-t Platform/Chassis (B903)

314 (903.011, 903.012, 903.013, 903.022, 903.612,... 02/1995-05/2006

314 (903.011, 903.012, 903.013, 903.022, 903.612,... 02/1995-05/2006

314 NGT (903.611, 903.612, 903.613, 903.622, 903.012,... 02/1995-05/2006

314 NGT (903.611, 903.612, 903.613, 903.622, 903.012,... 02/1995-05/2006

314 4x4 (903.612, 903.613, 903.622) 02/1995-05/2006

314 4x4 (903.612, 903.613, 903.622) 02/1995-05/2006

VITO Van (W638)

113 2.0 (638.014, 638.094) 03/1997-07/2003

113 2.0 (638.014, 638.094) 03/1997-07/2003

114 2.3 (638.034, 638.094) 03/1997-07/2003

114 2.3 (638.034, 638.094) 03/1997-07/2003

112 CDI 2.2 (638.094) 03/1999-07/2003

110 CDI 2.2 (638.094) 03/1999-07/2003

108 CDI 2.2 (638.094) 03/1999-07/2003

SPRINTER 4-t Bus (B904)

414 (904.662, 904.663) 02/1996-05/2006

414 (904.662, 904.663) 02/1996-05/2006

SPRINTER 4-t Platform/Chassis (B904)

414 (904.012, 904.013, 904.612, 904.613) 02/1995-05/2006

414 4x4 (904.012, 904.013, 904.612, 904.613) 05/1997-05/2006

414 4x4 (904.012, 904.013, 904.612, 904.613) 05/1997-05/2006

414 (904.012, 904.013, 904.612, 904.613) 02/1995-05/2006

414 NGT 02/1995-05/2006 414 NGT 02/1995-05/2006

SPRINTER 4-t Van (B904)

414 (904.062, 904.063, 904.662, 904.663) 02/1996-05/2006

414 4x4 (904.062, 904.063, 904.662, 904.663) 05/1997-05/2006

414 (904.062, 904.063, 904.662, 904.663) 02/1996-05/2006

414 4x4 (904.062, 904.063, 904.662, 904.663) 05/1997-05/2006

414 NGT 02/1995-05/2006 414 NGT 02/1995-05/2006

CLC-CLASS (CL203)

CLC 180 Kompressor (203.746) 05/2008-06/2011

SLK (R171)

200 Kompressor (171.445) 01/2008-02/2011

VIANO (W639)

3.5 (639.811, 639.813, 639.815) 09/2007

V-CLASS Van (638/2)

V 230 (638.234, 638.294) 08/1996-07/2003

V 230 (638.234, 638.294) 08/1996-07/2003

PUCH

G-MODELL (W460)

230 GE (460.238, 460.239) 03/1979-12/1991

230 GE (460.238, 460.239) 03/1979-12/1991

230 GE (460.238, 460.239) 03/1979-12/1991

SSANGYONG

ACTYON I

2.3 4x4 11/2006 2.3 11/2006

REXTON / REXTON II (GAB_)

2.3 RX230 4x4 05/2002-08/2006 2.7 Xdi 08/2004 2.7 D 4x4 06/2006

KORANDO Cabrio (KJ)

2.3 01/2002-06/2006 2.3 11/1997-02/2000 2.3 02/1999-11/2006

MUSSO (FJ)

2.0 10/1996-05/2005 2.3 04/2003-08/2006 2.3 10/1996-11/2002

KORANDO (KJ)

2.0 05/1997-10/2002 2.3 01/1999-11/2006 2.3 05/1997-02/2000

KORANDO (CK)

2.0 4WD 02/2012 2.0 02/2012

DAEWOO

MUSSO (FJ)

2.3 01/1999

KORANDO Cabrio (KJ)

2.0 16V 02/1999 2.3 02/1999

KORANDO (KJ)

2.3 01/1999

VW

LT 28-35 II Bus (2DB, 2DE, 2DK)

2.3 05/1996-07/2006

LT 28-46 II Van (2DA, 2DD, 2DH)

2.3 05/1996-07/2006

LT 28-46 II Platform/Chassis (2DC, 2DF, 2DG, 2DL, 2DM)

2.3 06/1996-07/2006

TARO

2.4 D 4x4 04/1989-03/1997