SINTLY

SINTLY | STARTER MOTOR **XTLSTR0103**

VOLTAGE **12** V

POWER **1.70** kW

APPLICATIONS AUTO UNION, DAEWOO, DAF FORD, MERCEDES-BENZ, NSU, SCANIA, SSA....

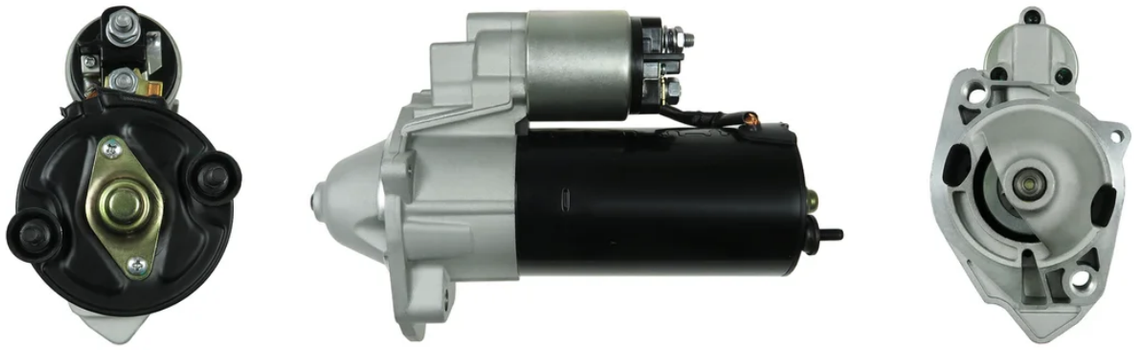

DIMENSIONS

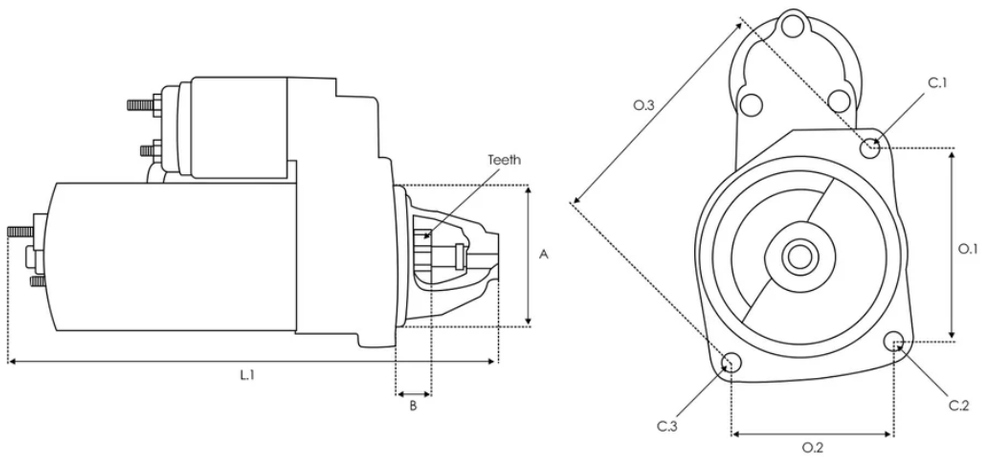

A **78.00 mm** B **11.00 mm** Teeth **10 qty.** L.1 **269.00 mm** O.1 **72.00 mm** O.2 **105.00 mm** O.3 **72.00 mm** C.1 **5.00 mm** C.2 **M12x1.75 mm** C.3 **M12x1.75 mm**

Números OE

Other	0001110039

Código equivalente

3EFFE	PRSL882 STRL882
ANDEL	ANM17160X

AS-PL	S0051
AUTOELECTRO	AEU0583
BOSCH	0001110053 0001110113 0986014940 B001117050 B001117148 B001117149
CARGO	112820 F032112820
CASCO	CST10542AS
DELCO	DRS4940
EAI	11285
ELECTROLOG	STR10131 STR10174
ELSTOCK	25-2019
FRIESEN	8014940
HC PARTS	CS583
HELLA	8EA726207-001
KUHNER	10583
LAUBER	22.0583 22.0583M
LOGISTIK	330735

LUCAS	LRS01291 LRS1291
MEAT & DORIA	5010513
MERCEDES	0011517801 0031517901 003151790180 0041513701 004151370180 0041517801 004151780180 A0011517801 A0031517901 A003151790180 A0041513701 A004151370180 A0041517801 A004151780180
POWERMAX	88212384
PRESTOLITE	S1053B S1056B
REAL	20401245BN
SANDO	6010542.0
SIDAT	S12BH0674A2
SOVEREIGN	SS460
STARDAX	STX200372
VALEO	458488
WAI	17150N 17227N 550.505.102.010 S133.110
WOODAUTO	STR50064

Aplicaciones

MERCEDES-BENZ

S-CLASS Coupe (C140)

SEC/CL 420 (140.063) 10/1994-02/1999

SEC/CL 420 (140.063) 10/1994-02/1999

500 SEC / CL 500 (140.070) 10/1992-12/1999

500 SEC / CL 500 (140.070) 10/1992-12/1999

124 Saloon (W124)

400 E 4.2 (124.034) 10/1992-06/1993

500 E (124.036) 01/1991-06/1993

300 D 4-matic (124.330) 08/1989-06/1993

250 D (124.125) 01/1989-06/1993

250 Turbo-D (124.128) 09/1988-06/1993

200 D (124.120) 12/1984-08/1989

200 D (124.120) 08/1989-06/1993

300 Turbo-D 4-matic (124.333) 09/1986-09/1988

300 Turbo-D 4-matic (124.333) 09/1986-09/1988

300 D 4-matic (124.330) 09/1986-08/1992

300 D (124.130) 06/1990-06/1993

300 D (124.130) 08/1989-06/1993

300 Turbo-D (124.133) 09/1988-06/1993

300 D (124.130) 12/1984-08/1989

250 D (124.125) 04/1985-06/1993

300 Turbo-D 4-matic (124.333) 01/1988-06/1993

300 Turbo-D (124.133) 09/1986-09/1988

300 Turbo-D (124.133) 09/1986-09/1988

S-CLASS (W126)

500 SE, SEL (126.036) 09/1985-06/1991

420 SE, SEL (126.034) 10/1985-12/1987

560 SE, SEL (126.038, 126.039) 10/1985-06/1991

560 SE, SEL 10/1985-06/1991

420 SE, SEL 10/1985-12/1987

500 SE, SEL 09/1987-06/1991

560 SE, SEL 08/1987-06/1991

560 SE, SEL (126.038) 10/1985-12/1987

500 SE, SEL Cat 06/1989-06/1991

420 SE, SEL (126.034, 126.035) 10/1985-06/1991

420 SE, SEL 10/1985-06/1991

S-CLASS (W140)

S 500 (140.050, 140.051) 01/1993-10/1998

400 SE, SEL/S420 (140.042, 140.043) 02/1991-10/1998

500 SE, SEL (140.050, 140.051) 02/1991-10/1998

S 500 (140.050, 140.051) 01/1993-10/1998

S 420 (140.042, 140.043) 01/1993-10/1998

S 420 (140.042, 140.043) 01/1993-10/1998

SL (R129)

500 (129.067) 09/1992-10/2001

500 SL (129.066) 09/1989-08/1992

500 SL (129.066) 09/1989-08/1992

500 (129.067) 09/1992-10/2001

S-CLASS Coupe (C126)

420 SEC (126.046) 10/1985-06/1991

500 SEC (126.044) 10/1985-06/1991

560 SEC (126.045) 10/1985-06/1991

500 SEC Cat 06/1989-06/1991

560 SEC (126.045) 10/1985-12/1989

500 SEC (126.044) 08/1987-06/1991

420 SEC (126.046) 10/1985-12/1987

500 SEC (126.044) 09/1985-06/1991

560 SEC (126.045) 10/1985-12/1987

SL (R107)

420 SL (107.047) 01/1986-08/1989

500 SL (107.046) 01/1986-08/1989

500 SL (107.046) 01/1986-08/1989

E-CLASS (W210)

E 50 AMG (210.072) 02/1996-08/1997

E 420 (210.072) 01/1996-06/1997

E 300 D (210.020) 06/1995-06/1997

E 290 Turbo-D (210.017) 03/1996-07/1999

E 250 D (210.010) 06/1995-07/1999

E 220 D (210.004) 06/1995-07/1999

E 220 D 05/1996-03/2002

E 250 Turbo-D (210.015) 06/1997-07/1999

E 200 D (210.003) 01/1996-03/2002

E 220 CDI (210.006) 06/1998-07/1999

E 200 CDI (210.007) 06/1998-03/2002

E 270 CDI (210.016) 07/1999-03/2002

E 220 CDI (210.006) 07/1999-03/2002

E 200 CDI (210.007) 07/1999-03/2002

E-CLASS (W124)

E 500 (124.036) 06/1993-06/1995

E 420 (124.034) 06/1993-06/1995

E 60 AMG (124.036) 05/1994-06/1995

E 500 (124.036) 07/1993-10/1994

E 300 D (124.131) 07/1993-06/1995

E 300 Turbo-D 4-matic (124.333) 06/1993-06/1995

E 200 D (124.120) 06/1993-06/1995

E 250 Turbo-D (124.128) 06/1993-06/1995

E 250 D (124.126, 124.129) 07/1993-06/1995

E 300 Turbo-D (124.133) 06/1993-06/1995

E-CLASS T-Model (S210)

E 420 T (210.272) 06/1996-06/1997

E 290 T Turbo-D (210.217) 06/1996-07/1999

E 250 T D (210.210) 06/1996-07/1999

E 250 T Turbo-D (210.215) 06/1997-07/1999

E 220 T CDI (210.206) 06/1998-07/1999

E 320 T CDI (210.226) 07/1999-03/2003

E 270 T CDI (210.216) 07/1999-03/2003

E 220 T CDI (210.206) 07/1999-03/2003

G-CLASS (W463)

500 GE (463.228) 09/1993-12/1994

G 300 TD (463.330, 463.331) 08/1996-07/2000

124 T-Model (S124)

250 T D (124.185) 01/1989-06/1993

200 T D (124.180) 09/1985-08/1991

200 T D (124.180) 09/1988-08/1991

300 T Turbo-D 4-matic (124.393) 09/1986-01/1989

300 T Turbo-D 4-matic (124.393) 01/1989-06/1993

250 T D (124.185) 09/1985-06/1993

300 T D (124.190) 01/1989-06/1993

300 T D (124.190) 09/1986-06/1993

300 T Turbo-D (124.193) 01/1989-06/1993

300 T Turbo-D 09/1986-01/1989

300 T Turbo-D 09/1986-01/1989

190 (W201)

D 2.5 (201.126) 08/1989-08/1993

Turbo-D 2.5 (201.128) 02/1988-08/1993

D 2.5 (201.126) 04/1985-08/1993

D 2.0 (201.122) 08/1983-08/1989

D 2.0 (201.122) 08/1989-08/1993

E-CLASS T-Model (S124)

E 300 TD (124.191) 06/1993-06/1996

E 300 T Turbo-D 4-matic (124.393) 06/1993-06/1996

E 300 T Turbo-D (124.193) 06/1993-06/1996

E 250 TD (124.186) 06/1993-06/1996

E 250 Turbo D 06/1993-06/1996

C-CLASS T-Model (S202)

C 250 T Turbo-D (202.188) 06/1996-03/2001

C 220 T D (202.182) 06/1996-09/1998

C 200 T D (202.180) 10/1996-03/2001

C 200 T CDI (202.194) 03/1998-03/2001

C 220 T D (202.182) 06/1996-03/2001

C 220 T CDI (202.193) 09/1997-03/2001

C-CLASS (W202)

C 200 D (202.120) 03/1993-05/2000

C 250 Turbo-D (202.128) 10/1995-05/2000

C 250 D (202.125) 05/1993-05/2000

C 220 D (202.121) 08/1993-05/2000

C 220 D (202.021) 07/1996-05/2000

C 200 D (202.122) 10/1996-05/2000

C 220 CDI (202.133) 09/1997-05/2000

C 200 CDI (202.134) 03/1998-05/2000

VITO Bus (W638)

108 D 2.3 (638.164) 02/1996-07/2003

110 TD 2.3 (638.174) 02/1996-07/2003

112 CDI 2.2 (638.194) 03/1999-07/2003

108 CDI 2.2 (638.194) 03/1999-07/2003

110 CDI 2.2 (638.194) 03/1999-07/2003

SPRINTER 2-t Bus (B901, B902)

208 D (901.371, 902.371, 902.372) 02/1995-04/2000

210 D (902.471, 902.472) 03/1997-04/2000

212 D (902.471, 902.472) 02/1995-04/2000

216 CDI (902.671, 902.672) 04/2000-05/2006

213 CDI (902.671, 902.672) 04/2000-05/2006

211 CDI (902.671, 902.672) 04/2000-05/2006

208 CDI (901.671, 902.671, 902.672) 04/2000-05/2006

G-CLASS Cabrio (W463)

G 300 TD (463.308) 09/1996-07/2000

SPRINTER 2-t Platform/Chassis (B901, B902)

210 D (901.421, 902.412) 01/1997-04/2000

208 D (901.311, 901.312, 901.321, 902.311, 902.312,... 09/1996-04/2000

208 D (901.311, 901.312, 901.321, 902.311, 902.312,... 01/1995-04/2000

212 D (901.421, 902.412) 02/1995-04/2000

211 CDI (901.621, 902.611, 902.612, 902.621, 902.622) 04/2000-05/2006

216 CDI (902.611, 902.612, 902.621, 902.622) 04/2000-05/2006

208 CDI (901.611, 901.612, 901.621, 902.611, 902.612,... 04/2000-05/2006

213 CDI (901.621, 902.611, 902.612, 902.621, 902.622) 04/2000-05/2006

SPRINTER 3-t Bus (B903)

308 D (903.372, 903.373) 02/1995-04/2000

312 D 2.9 4x4 (903.473) 05/1997-08/2002

310 D 4x4 (903.472, 903.473) 05/1997-08/2002

310 D (903.471, 903.472, 903.473) 01/1997-12/1999

312 D 2.9 (903.471, 903.472, 903.473) 02/1995-04/2000

316 CDI (903.671, 903.672, 903.673) 04/2000-05/2006

311 CDI (903.671, 903.672) 04/2000-05/2006

308 CDI (903.671, 903.672, 903.673) 04/2000-05/2006

316 CDI (903.671, 903.672, 903.673) 04/2000-05/2006

313 CDI (903.671, 903.672) 04/2000-05/2006

313 CDI 4x4 (903.672, 903.673) 08/2002-05/2006

311 CDI 4x4 (903.672, 903.673) 08/2002-05/2006

SPRINTER 3-t Platform/Chassis (B903)

308 D 2.3 (903.311, 903.322) 11/1996-04/2000

308 D 2.3 (903.311, 903.312, 903.322) 02/1995-04/2000

310 D 2.9 (903.411, 903.412, 903.413, 903.421, 903.422,... 01/1997-04/2000

312 D 2.9 (903.411, 903.412, 903.421, 903.422, 903.423) 02/1995-04/2000

316 CDI (903.611, 903.612, 903.613, 903.621, 903.622,... 04/2000-05/2006

311 CDI (903.611, 903.612, 903.613, 903.621, 903.622,... 04/2000-05/2006

308 CDI (903.611, 903.612, 903.613, 903.621, 903.622,... 04/2000-05/2006

313 CDI (903.611, 903.612, 903.621, 903.622) 04/2000-05/2006

316 CDI (903.611, 903.612, 903.613, 903.621, 903.622,... 04/2000-05/2006

311 CDI 4x4 (903.612, 903.613, 903.622, 903.623) 04/2000-05/2006

313 CDI 4x4 (903.612, 903.613, 903.622, 903.623) 04/2000-05/2006

VITO Van (W638)

108 D 2.3 (638.064, 638.068) 03/1997-07/2003

110 D 2.3 (638.074, 638.078) 03/1997-07/2003

112 CDI 2.2 (638.094) 03/1999-07/2003

110 CDI 2.2 (638.094) 03/1999-07/2003

108 CDI 2.2 (638.094) 03/1999-07/2003

V-CLASS (638/2)

V 200 CDI (638.294) 03/1999-07/2003

V 220 CDI (638.294) 03/1999-07/2003

V 230 TD (638.274) 09/1996-07/2003

SPRINTER 2-t Van (B901, B902)

208 D (901.361, 901.362, 902.361, 902.362) 10/1996-04/2000

210 D (901.461, 901.462, 902.461, 902.462) 01/1997-04/2000

208 D (901.361, 901.362, 902.361, 902.362) 02/1995-04/2000

212 D (901.461, 901.462, 902.461, 902.462) 02/1995-04/2000

216 CDI (902.661, 902.662) 04/2000-05/2006

208 CDI (901.661, 901.662, 902.661, 902.662) 04/2000-05/2006

213 CDI (901.661, 901.662, 902.661, 902.662) 04/2000-05/2006

211 CDI (901.661, 901.662, 902.661, 902.662) 04/2000-05/2006

SPRINTER 3-t Van (B903)

308 D 2.3 (903.361, 903.362, 903.363) 02/1995-04/2000

310 D 2.9 (903.461, 903.462, 903.463) 02/1995-04/2000

308 D 2.3 (903.361) 02/1995-04/2000

312 D 2.9 4x4 (903.461, 903.462) 05/1997-08/2002

312 D 2.9 (903.461, 903.462, 903.463) 02/1995-04/2000

308 CDI (903.661, 903.662, 903.663) 04/2000-05/2006

313 CDI (903.663, 903.662, 903.661) 04/2000-05/2006

316 CDI (903.661, 903.662, 903.663) 04/2000-05/2006

311 CDI (903.661, 903.662, 903.663) 04/2000-05/2006

316 CDI (903.661, 903.662, 903.663) 04/2000-05/2006

311 CDI 4x4 (903.662, 903.663) 08/2002-05/2006

313 CDI 4x4 (903.662, 903.663) 08/2002-05/2006

316 CDI 4x4 (903.662, 903.663) 02/2001-05/2006

316 CDI 4x4 (903.662, 903.663) 02/2001-05/2006

E-CLASS (W211)

E 220 CDI (211.006) 03/2002-12/2008

E 270 CDI (211.016) 03/2002-12/2008

E 280 CDI (211.023) 05/2004-12/2008

E 200 CDI (211.004) 07/2002-12/2008

E 320 CDI (211.026) 11/2002-12/2008

E 200 CDI (211.007) 04/2006-12/2008

E 220 CDI (211.008) 04/2006-12/2008

C-CLASS T-Model (S203)

C 270 CDI (203.216) 03/2001-08/2007

C 200 CDI (203.204) 03/2001-08/2007

C 200 CDI (203.207) 04/2003-08/2007

C 200 CDI (203.207) 04/2003-08/2007

C 220 CDI (203.208) 02/2004-08/2007

C 220 CDI (203.206, 203.208) 03/2001-08/2007

C 220 CDI (203.206, 203.208) 03/2001-08/2007

SPRINTER 4-t Van (B904)

412 D 4x4 05/1997-05/2006

412 D 02/1996-05/2006

410 D 4x4 05/1997-05/2006

408 D 02/1996-05/2006

410 D 02/1996-05/2006

416 CDI 4x4 04/2000-05/2006

413 CDI 04/2000-05/2006

408 CDI 04/2000-05/2006

411 CDI 04/2000-05/2006

413 CDI 4x4 04/2000-05/2006

411 CDI 4x4 04/2000-05/2006

416 CDI 04/2000-05/2006

416 CDI 04/2000-05/2006

416 CDI 4x4 04/2000-05/2006

SPRINTER 4-t Bus (B904)

408 CDI (904.662, 904.663) 04/2000-05/2006

413 CDI (904.663, 904.662) 04/2000-05/2006

411 CDI (904.662, 904.663) 04/2000-05/2006

416 CDI (904.662, 904.663) 04/2000-05/2006

SPRINTER 4-t Platform/Chassis (B904)

410 D 4x4 05/1997-05/2006

408 D 02/1996-05/2006

412 D 4x4 05/1997-05/2006

412 D 02/1996-05/2006

410 D 02/1996-05/2006

413 CDI 4x4 04/2000-05/2006

416 CDI 4x4 04/2000-05/2006

416 CDI 04/2000-05/2006

413 CDI 04/2000-05/2006

411 CDI 4x4 04/2000-05/2006

408 CDI 04/2000-05/2006

411 CDI 04/2000-05/2006

416 CDI 4x4 04/2000-05/2006

416 CDI 04/2000-05/2006

C-CLASS (W203)

C 200 CDI (203.004) 02/2001-06/2003

C 200 CDI (203.004) 09/2000-06/2003

C 200 CDI (203.007) 04/2003-02/2007

C 220 CDI (203.008) 04/2003-02/2007

C 200 CDI (203.007) 04/2003-02/2007

C 220 CDI (203.006, 203.008) 05/2000-02/2007

C 270 CDI (203.016) 12/2000-02/2007

C 220 CDI (203.006, 203.008) 05/2000-02/2007

C-CLASS Coupe (CL203)

C 220 CDI (203.706) 03/2001-01/2004

C 200 CDI (203.707) 03/2003-05/2008

C 220 CDI (203.708) 02/2004-05/2008

CLK (C209)

CLK 270 CDI (209.316) 10/2002-05/2009

CLK 270 CDI (209.316) 10/2002-05/2009

CLK 220 CDI (209.308) 01/2005-05/2009

VIANO (W639)

CDI 2.2 (639.711, 639.713, 639.811, 639.813, 639.815) 09/2003

CDI 2.2 (639.711, 639.713, 639.811, 639.813, 639.815) 09/2003

CDI 2.2 4-matic (639.713) 07/2005

CDI 2.2 (639.711, 639.713, 639.811, 639.813, 639.815) 08/2005

CDI 2.2 4-matic (639.711, 639.713, 639.811, 639.813,... 07/2005

E-CLASS T-Model (S211)

E 320 T CDI (211.226) 03/2003-07/2009

E 280 T CDI (211.223) 05/2004-07/2009

E 220 T CDI (211.206) 03/2003-07/2009

E 270 T CDI (211.216) 03/2003-07/2009

E 220 CDI (211.206) 03/2003-07/2009

E 220 T CDI (211.208) 04/2006-07/2009

VITO / MIXTO Van (W639)

111 CDI (639.601, 639.603, 639.605) 09/2003

109 CDI (639.601, 639.603, 639.605) 08/2006

111 CDI 4x4 (639.601, 639.603, 639.605) 09/2007

111 CDI (639.601, 639.603) 09/2007

109 CDI (639.601, 639.603, 639.605) 08/2006

111 CDI (639.601, 639.603) 09/2007

115 CDI (639.601, 639.603, 639.605) 09/2003

115 CDI (639.601, 639.603, 639.605) 09/2003

109 CDI (639.601, 639.603, 639.605) 09/2003

115 CDI 4x4 (639.601, 639.603, 639.605) 07/2006

VITO Bus (W639)

109 CDI (639.701, 639.703, 639.705) 09/2006

109 CDI 4x4 (639.701) 09/2007-08/2014

115 CDI 4x4 (639.701, 639.705) 09/2007-08/2014

109 CDI (639.701, 639.703, 639.705) 09/2006

115 CDI (639.701, 639.703, 639.705) 09/2003

109 CDI (639.701, 639.703, 639.705) 09/2003

111 CDI (639.701, 639.703, 639.705) 09/2003

115 CDI (639.701, 639.703, 639.705) 09/2003

111 CDI (639.701, 639.703, 639.705) 09/2007

111 CDI 4x4 (639.701, 639.703, 639.705) 09/2007-08/2014

UNIMOG

U 90 07/1996 UX 100H,UX 100M 09/1996 U 90 07/1996

U 100L 07/1996 U 100L 07/1996 UX 100H,UX 100M 09/1996

S-CLASS (W220, V220)

S 320 CDI (220.026, 220.126) 08/1999-09/2002

M-CLASS (W163)

ML 270 CDI (163.113) 12/1999-06/2005

SPRINTER 3-t Platform/Chassis (B906)

209 CDI (906.111, 906.113, 906.211, 906.213) 06/2006-12/2009

215 CDI (906.111, 906.113, 906.211, 906.213) 06/2006-12/2009

215 CDI (906.111, 906.113, 906.211, 906.213) 06/2006-12/2009

215 CDI (906.111, 906.113, 906.211, 906.213) 06/2006-12/2009

213 CDI (906.111, 906.113, 906.211, 906.213) 06/2006-12/2009

211 CDI (906.111, 906.113, 906.211, 906.213) 06/2006-12/2009

SPRINTER 3-t Van (B906)

209 CDI (906.611, 906.613) 06/2006-12/2009

215 CDI (906.611, 906.613) 06/2006-12/2009

211 CDI (906.611, 906.613) 06/2006-12/2009

213 CDI (906.611, 906.613) 06/2006-12/2009

215 CDI (906.611, 906.613) 06/2006-12/2009

215 CDI (906.611, 906.613) 06/2006-12/2009

SPRINTER 3,5-t Platform/Chassis (B906)

315 CDI (906.131, 906.133, 906.135, 906.231, 906.233,... 06/2006-12/2009

318 CDI (906.131, 906.133, 906.135, 906.231, 906.233,... 06/2006-12/2009

315 CDI (906.131, 906.133, 906.135, 906.231, 906.233,... 06/2006-12/2009

315 CDI (906.131, 906.133, 906.135, 906.231, 906.233,... 06/2006-12/2009

318 CDI (906.131, 906.133, 906.135, 906.231, 906.233,... 06/2006-12/2009

318 CDI (906.131, 906.133, 906.135, 906.231, 906.233,... 06/2006-12/2009

311 CDI (906.131, 906.133, 906.135, 906.231, 906.233,... 06/2006-12/2009

309 CDI (906.131, 906.133, 906.135, 906.231, 906.233,... 06/2006-12/2009

SPRINTER 5-t Platform/Chassis (B906)

511 CDI (906.153, 906.155, 906.253, 906.255) 06/2006-12/2009

509 CDI (906.153, 906.155, 906.253, 906.255) 06/2006-12/2009

515 CDI (906.153, 906.155, 906.253, 906.255) 06/2006-12/2009

515 CDI (906.153, 906.155, 906.253, 906.255) 06/2006-12/2009

515 CDI (906.153, 906.155, 906.253, 906.255) 06/2006-12/2009

SPRINTER 3,5-t Van (B906)

311 CDI (906.631, 906.633, 906.635, 906.637) 06/2006-12/2009

315 CDI (906.631, 906.633, 906.635, 906.637) 06/2006-12/2009

315 CDI (906.631, 906.633, 906.635, 906.637) 06/2006-12/2009

318 CDI (906.631, 906.633, 906.635, 906.637) 06/2006-12/2009

309 CDI (906.631, 906.633, 906.635, 906.637) 06/2006-12/2009

315 CDI (906.631, 906.633, 906.635, 906.637) 06/2006-12/2009

318 CDI (906.631, 906.633, 906.635, 906.637) 06/2006-12/2009

318 CDI (906.631, 906.633, 906.635, 906.637) 06/2006-12/2009

318 CDI (906.631, 906.633, 906.635, 906.637) 06/2006-12/2009

SPRINTER 3-t Bus (B906)

211 CDI (906.711, 906.713) 06/2006-12/2009

215 CDI (906.711, 906.713) 06/2006-12/2009

215 CDI (906.711, 906.713) 06/2006-12/2009

215 CDI (906.711, 906.713) 06/2006-12/2009

SPRINTER 5-t Van (B906)

515 CDI (906.653, 906.655, 906.657) 06/2006-12/2009

509 CDI (906.653, 906.655, 906.657) 06/2006-12/2009

511 CDI (906.653, 906.655, 906.657) 06/2006-12/2009

515 CDI (906.653, 906.655, 906.657) 06/2006-12/2009

515 CDI (906.653, 906.655, 906.657) 06/2006-12/2009

SPRINTER 3,5-t Bus (B906)

315 CDI (906.731, 906.733, 906.735) 06/2006-12/2009

311 CDI (906.731, 906.733, 906.735) 06/2006-12/2009

315 CDI (906.731, 906.733, 906.735) 06/2006-12/2009

315 CDI (906.731, 906.733, 906.735) 06/2006-12/2009

NSU

PRINZ

600 4L (47) 08/1961-07/1970

1000 (67) 09/1969-03/1974

600 (47) 09/1969-11/1971

FORD

TAUNUS 12M II Turnier (15G)

1.3 09/1966-06/1971

TAUNUS 15M I

1.5 12/1954-09/1958

TAUNUS 12M II (12G)

1.3 08/1966-06/1971

DAF

46

0.8 DE LUXE 09/1974-08/1975

46 Estate

0.8 SUPER LUX 09/1974-08/1975

55 Coupe

1.1 MARATHON 12/1971-09/1972

1.1 05/1968-09/1972

66

1.1 10/1972-08/1975

AUTO UNION

MUNGA

F 91/4 03/1957-05/1969

DAEWOO

KORANDO Cabrio (KJ)

2.9 TD 02/1999

KORANDO (KJ)

2.9 D 01/1999

MUSSO (FJ)

2.9 D 4x4 01/1999-09/1999

SSANGYONG

MUSSO (FJ)

2.9 D 03/1996-11/1998

SCANIA

2 - series

112 M/305 01/1981-12/1986

112 H/305 01/1981-12/1986

112 H/280 01/1981-12/1986