SINTLY

SINTLY | STARTER MOTOR **XTLSTR1015**

VOLTAGE **24** V

POWER **4.00** kW

APPLICATIONS MAN, NEOPLAN, TEMSA, VW

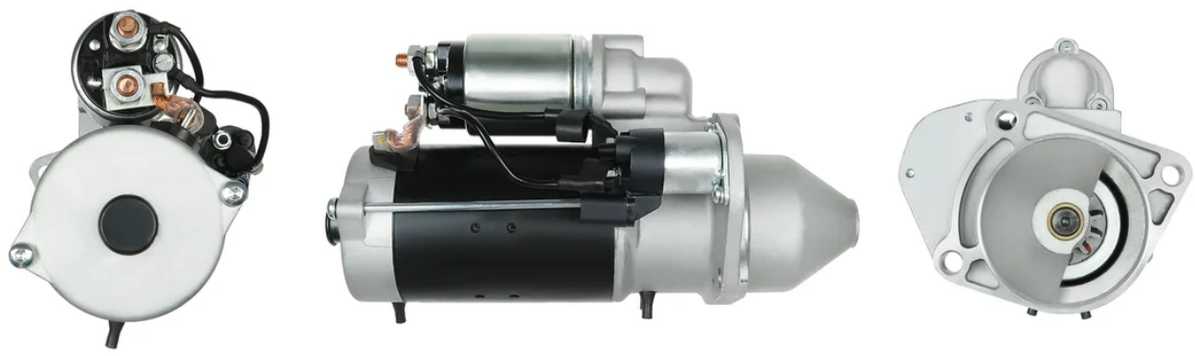

DIMENSIONS

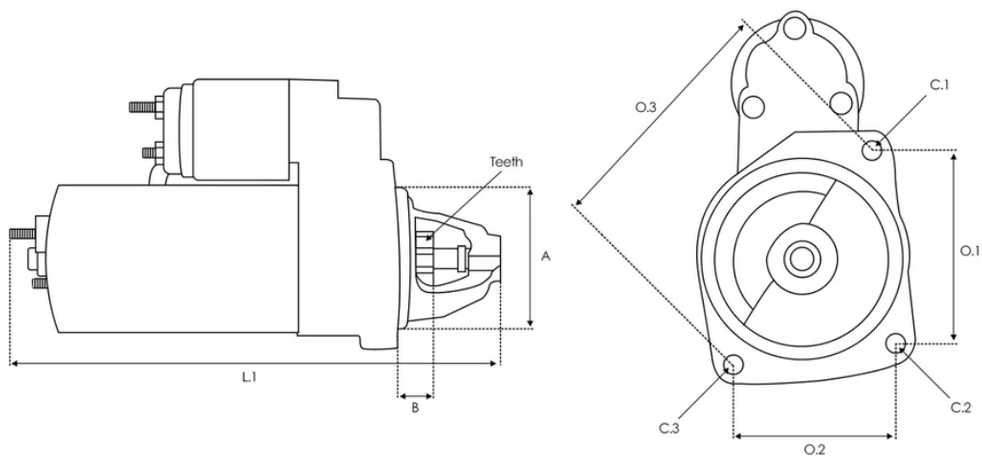

A **89.00 mm** B **28.00 mm** Teeth **11 qty.** L.1 **315.00 mm** O.1 **94.00 mm** O.2 **127.00 mm** O.3 **82.00 mm** C.1 **11.00 mm** C.2 **11.00 mm** C.3 **11.00 mm**

Números OE

Other	0001231023

Código equivalente

3EFFE	PRSS587 STRS587
ACAUTO	AC-CBS1530

AINDE	CGB-21023 CGB-21023LU
AIRSTAL	30-1571
ALANKO	10439915 11439915
ANDEL	ANM12281 ANM12281X
AS-PL	S0180 UD02776S
ATL AUTOTECHNIK	A23200 A23201
AUTO MAGNETO	AM-2213
AUTOTEAM	SBO722 SBO722A SBO722C
BORG & BECK	BST32095
BOSCH	0001231034 0001231034-R 0001263071 0001263071-R 0986023200 1986S10077
BTS TURBO	S100683 S100684 S104306
CARGO	114001 F032114001
CARWOOD GROUP	BREF0320986023200 BREF032114001 BREF0321986S10077
CASCO	CST10722AS CST10722GS CST10722RS
CEVAM	8169

DA SILVA	025703
DAF	0910428
DELCO	19084007 DRS0061 DS1171 SER84202-12B1
DRI	671006114
ELECTROLOG	STR1419
ELSTOCK	45-4168
FARCOM	106262
FEBI BILSTEIN	100530
HC PARTS	CS1530
HELLA	8EA012586-311 8EA738259-441
HENKEL PARTS	3120428 3120429 3120432
HIGHWAY AUTOMO-	67031004
HOFFER	H5110057G
ITAB AUTOMOTIVE	10010722AV 10010722OV
KRAUF	STB4001 STB9001 STI4001

KUHNER	254533 254533B 254533M 254533P
LE PART	LES0456
LOGISTIK TIVE	331268
LUCAS	LRS02496 LRS2496
MAHLE	MS423
MAN	51262017193 51262017222 51262017236 51262017237 51262019222 51262019236 51262019237
MEAT & DORIA	5110057G
MONARK	081251034
POWER TRUCK	PTC-4044
POWERMAX	88213992
PRESTOLITE	860813 M85R3002SE
REAL	20401227BN 20401227OE 20401227RC
REMANTE	011-001-000865R
ROLLCO	STM1233
SANDO	6010722.0 6010722.1 6010722.2

SEG AUTOMOTIVE	T001008001
SIDAT	S24BH0067 S24BH0067A2
SIOM	MAV127220
TESLA TECHNICS	TT16601
TMI	ST02694
VW	2T2911023B
WAI	30170N 551.514.113.010 551.514.113.018 551.514.113.090 551.514.113.210 551.514.113.215 551.514.113.280 551.514.113.380 551.514.113.440 S133.409
WILMINK GROUP	WG2045193
WOODAUTO	BOS0001231034 STR50418

Aplicaciones

MAN

NM

NM 243	08/2002-10/2009	NM 283	08/2002-10/2009
NM 283	08/2002-10/2009	NM 253	05/2007-06/2014
NM 293	05/2007-06/2014	NM 243	08/2002-10/2009
NM 283	08/2002-10/2009		

LION´S CITY

19.240 05/2004-10/2009 19.240 05/2004-10/2009 A 35 10/2009

19.290 05/2004 19.240 05/2004-10/2009 A 35 10/2009

19.240 05/2004-10/2009 A 66 02/2009 19.290 05/2004 A 66 02/2009

19.290 05/2004 Lions City 05/2007-12/2014 Lions City 05/2007

Lions City 05/2007-06/2014 Lions City 05/2007

Lions City 05/2007-06/2014 Lions City 05/2007-12/2014

Lions City Hybrid 05/2007-12/2014 A 37 01/2002-10/2009

A 37 01/2002-10/2009 A 37 01/2002-10/2009 19.280 05/2004

19.280 05/2004 19.280 05/2004 A 21 06/1996 19.280 05/2004

A 20 07/1998 19.280 05/2004 19.280 05/2004

Lions City 05/2004-10/2006 Lions City 05/2004-10/2009

Lions City 05/2004-10/2009 Lions City 05/2004-10/2006

Lions City 05/2004-10/2009 Lions City 05/2004-10/2006

Lions City 05/2004-10/2009 Lions City 05/2004-10/2009

Lions City 05/2004-10/2006

HOCL

14.250 HOCL-NL 05/2007 14.280 HOCL 08/2002-12/2014

14.280 HOCL 08/2002-12/2014 12.240 HOCL-NL 05/2000

14.290 HOCL-NL 05/2007 12.240 HOCL-NL 05/2000

18.290 HOCL-NL 05/2007-12/2014 14.280 HOCL 08/2002-12/2014

14.250 HOCL-NL 05/2007 24.250 05/2012 14.260 06/2005-10/2009

12.260 03/2009-12/2014 12.260 06/2005-10/2009 24.290 05/2012

12.245 05/2004-08/2008 24.250 05/2012 24.260 05/2012-12/2014

14.260 06/2005-10/2009 24.290 05/2012 19.260 03/2009-12/2014

24.250 05/2012 24.250 05/2012 12.260 03/2009-12/2014

24.290 05/2012 12.245 02/2002-07/2006 12.260 06/2005-10/2009

24.290 05/2012 14.245 05/2004-05/2010 18.260 05/2007-12/2014

18.260 02/2003-10/2006 18.240 HOCL-NL 08/2002-10/2009

18.240 HOCL-NL 08/2002-10/2009 14.240 HOCL-NL 05/2000

18.250 HOCL-NL, HOCL-SKD(SL) 05/2007-12/2014 14.240 HOCL-NL 05/2000

13.220 HOCL/R 09/2001-04/2004 12.220 HOCL/R-NL 04/1999-05/2009

18.280 HOCL-NL 05/2002-08/2008 13.220 HOCL/R 09/2001-04/2004

18.280 HOCL-NL 05/2002-08/2008 12.220 HOCL/R-NL 04/1999-05/2009

18.220 HOCL/R-NL, HOCL/SKD(SL) 10/1998-05/2001

13.220 HOCL/R 09/2001-04/2004

18.220 HOCL/R-NL, HOCL/SKD(SL) 10/1998-05/2001

18.280 HOCL-NL 05/2002-08/2008 14.220 HOCL/R-NL 01/1998

14.220 HOCL/R-NL 01/1998

18.220 HOCL/R-NL, HOCL/SKD(SL) 10/1998-05/2001

18.280 HOCL-NL 05/2002-08/2008

18.220 HOCL/R-NL, HOCL/SKD(SL) 10/1998-05/2001

14.220 HOCL/R-NL 01/1998

18.220 HOCL/R-NL, HOCL/SKD(SL) 10/1998-05/2001

13.220 HOCL/R 09/2001-04/2004

18.220 HOCL/R-NL, HOCL/SKD(SL) 10/1998-05/2001

13.220 HOCL/R 09/2001-04/2004 10.190 05/1988-10/1997

10.190 05/1988-10/1997 11.230 08/1991-10/1997 10.230 08/1991-10/1997

10.190 HOCL 08/1987-04/2004 11.150 HOCL 08/1987-04/2004

10.150 HOCL 08/1987-04/2004 10.150 HOCL 08/1987-04/2004

11.150 HOCL 08/1987-04/2004 11.190 05/1988-10/1997

11.190 05/1988-10/1997 11.190 HOCL 08/1987-04/2004

SÜ

SÜ 263 06/2005-10/2009 SÜ 293 09/2003 SÜ 243 06/2005-10/2009

SÜ 283 09/2003 SÜ 283 09/2003 SÜ 283 09/2003

LION S INTERCITY

Lions Intercity 07/2015 Lions Intercity 07/2015 Lions Intercity 07/2015

Lions Intercity 07/2015 Lions Intercity 07/2015 Lions Intercity 07/2015

Lions Intercity 10/2019 Lions Intercity 10/2019 Lions Intercity 10/2019

Lions Intercity 10/2019 Lions Intercity 10/2019 Lions Intercity 10/2019

Lions Intercity 10/2019 Lions Intercity 10/2019

LION´S CLASSIC

Lions Classic 05/2004-05/2014 Lions Classic 05/2004-05/2014

Lions Classic 05/2004-10/2009 Lions Classic 05/2004-10/2009

Lions Classic 05/2004-05/2014 Lions Classic 05/2004-05/2014

Lions Classic 05/2004-03/2009 Lions Classic 05/2004-03/2009

Lions Classic 05/2004-03/2009 Lions Classic 05/2004-03/2009

Lions Classic 05/2004-10/2009 Lions Classic 05/2004-03/2009

Lions Classic 05/2004-10/2009 Lions Classic 05/2004-03/2009

NL

250 05/2007 250 05/2007 290 05/2007 290 05/2007

220 08/2001-10/2006 260 06/2005-10/2009 240 08/2002

240 05/2000-01/2007 280 03/2003-10/2009 280 08/2002

240 08/2002 240 08/2002 240 06/2003-12/2004

280 03/2003-10/2009 240 08/2002 280 08/2002-12/2004

240 05/2000-01/2007 240 08/2002-12/2004 240 08/2002-12/2004

240 05/2000-01/2007 240 05/2000-01/2007 280 03/2003-10/2009

280 03/2003-10/2009 280 06/2003-12/2004 240 05/2000-01/2007

280 03/2003-10/2009 280 08/2002 240 06/2003-12/2004

280 08/2002-12/2004 240 08/2002 280 08/2002

280 06/2003-12/2004 280 08/2002 280 08/2002 280 08/2002

280 03/2003-10/2009 283 05/2000-10/2006 243 01/2002-12/2004

223 06/1996-10/2006 223 06/1996-10/2006 223 06/1996-10/2006

263 06/1996-10/2001

TGL I

7.150, 8.150 04/2005-03/2022 10.180 04/2005-03/2022

8.180 04/2005-03/2022 12.180 04/2005-03/2022 10.210 04/2005-03/2022

10.180 04/2005-03/2022 8.180 04/2005-03/2022 10.180 04/2005-03/2022

8.180 04/2005-03/2022 7.150, 8.150 04/2005-03/2022

7.180, 8.180 04/2005-03/2022 10.210 04/2005-03/2022

12.180 04/2005-03/2022 12.210 04/2005-03/2022

7.180, 8.180 04/2005-03/2022 10.180 04/2005-03/2022

12.210 04/2005-03/2022 10.210 04/2005-03/2022 8.210 04/2005-03/2022

7.180, 8.180 04/2005-03/2022 10.180 04/2005-03/2022

8.180 04/2005-03/2022 8.180 04/2005-03/2022 8.180 04/2005-03/2022

8.210 04/2005-03/2022 7.150, 8.150 04/2005-03/2022

12.180 04/2005-03/2022 7.150, 8.150 04/2005-03/2022

7.180, 8.180 04/2005-03/2022 10.180 04/2005-03/2022

8.180 04/2005-03/2022 7.150, 8.150 04/2005-03/2022

8.210 04/2005-03/2022 8.180 04/2005-03/2022 12.180 04/2005-03/2022

12.180 04/2005-03/2022 7.180, 8.180 04/2005-03/2022

7.180, 8.180 04/2005-03/2022 12.210 04/2005-03/2022

7.180, 8.180 04/2005-03/2022 12.180 04/2005-03/2022

7.150, 8.150 04/2005-03/2022 8.150 10/2006-03/2022

8.150 10/2006-03/2022 8.150 10/2006-03/2022 8.150 10/2006-03/2022

8.150 10/2006-03/2022 12.220 04/2005-03/2022 12.220 04/2005-03/2022

12.220 04/2005-03/2022 10.220 04/2005-03/2022 12.220 04/2005-03/2022

8.220 04/2005-03/2022 12.220 04/2005-03/2022 12.220 04/2005-03/2022

10.220 04/2005-03/2022 12.220 04/2005-03/2022 12.220 04/2005-03/2022

8.220 04/2005-03/2022 12.220 04/2005-03/2022 8.250 04/2008-03/2022

7.150 01/2004-03/2022 7.150 01/2004-03/2022 7.180 01/2004-03/2022

12.180 08/2012-03/2022 7.150 01/2004-03/2022 7.150 01/2004-03/2022

8.180 08/2012-03/2022 7.150 01/2004-03/2022 7.180 01/2004-03/2022

8.250 04/2008-03/2022 7.150 01/2004-03/2022 10.250 04/2008-03/2022

7.180 01/2004-03/2022 10.180 08/2012-03/2022 8.220 08/2012-03/2022

10.250	04/2008-03/2022	7.180	01/2004-03/2022	7.180	01/2004-03/2022
7.180	08/2012-03/2022	7.180	01/2004-03/2022	12.240	04/2005-03/2022
8.240	04/2005-03/2022	10.240	04/2005-03/2022	12.240	04/2005-03/2022
12.240	04/2005-03/2022	10.240	04/2005-03/2022	10.240	04/2005-03/2022
8.240	04/2005-03/2022	8.240	04/2005-03/2022	10.250	04/2005-03/2022
8.250	04/2005-03/2022	10.250	04/2005-03/2022	12.250	04/2005-03/2022
8.250	04/2005-03/2022	12.250	04/2005-03/2022	12.250	04/2005-03/2022
12.250	04/2005-03/2022	12.250	04/2008-03/2022	12.250	04/2008-03/2022
10.220	08/2012-03/2022	12.220	08/2012-03/2022	12.190	12/2017-03/2022
8.190	01/2018-03/2022	7.190	12/2017-03/2022	8.190	01/2018-03/2022
10.190	12/2017-03/2022	7.160	12/2017-03/2022	10.190	12/2017-03/2022
12.190	12/2017-03/2022	12.190	12/2017-03/2022	8.160	01/2018-03/2022
8.160	01/2018-03/2022	12.190	12/2017-03/2022	7.190	12/2017-03/2022
8.190	01/2018-03/2022	7.160	12/2017-03/2022	10.190	12/2017-03/2022
8.160	01/2018-03/2022	8.190	12/2017-03/2022	7.190	12/2017-03/2022
7.160	12/2017-03/2022	7.160	12/2017-03/2022	10.190	12/2017-03/2022
8.160	12/2017-03/2022	7.190	01/2018-03/2022	7.190	12/2017-03/2022

TGA

26.280	11/2002	26.330	11/2002	18.330	03/2001-09/2001
18.280	03/2001-09/2001				

TGM I

26.290	04/2009-03/2022	26.290	04/2008-03/2022	12.250	04/2008-03/2022

26.340	08/2012-03/2022	18.290	04/2008-03/2022	15.290	04/2008-03/2022
26.340	04/2009-03/2022	15.340	08/2012-03/2022	26.340	08/2012-03/2022
22.290	04/2008-03/2022	12.250	04/2008-03/2022	15.250	04/2008-03/2022
12.290	04/2008-03/2022	18.340	04/2008-03/2022	22.250	04/2008-03/2022
26.340	04/2008-03/2022	26.340	08/2012-03/2022	18.340	08/2012-03/2022
15.340	04/2008-03/2022	12.290	04/2008-03/2022	22.250	04/2008-03/2022
15.290	04/2008-03/2022	22.290	04/2008-03/2022	18.290	04/2008-03/2022
26.290	04/2009-03/2022	15.250	04/2008-03/2022	26.290	04/2008-03/2022
18.280	10/2005-03/2022	18.330	10/2005-03/2022	18.330	10/2005-03/2022
18.240	10/2005-03/2022	18.240	10/2005-03/2022	18.280	10/2005-03/2022
18.330	10/2005-03/2022	13.240	04/2006-03/2022	13.240	04/2006-03/2022
13.240	04/2006-03/2022	13.280	04/2006-03/2022	26.330	04/2006-03/2022
26.330	04/2006-03/2022	15.240	10/2005-03/2022	26.280	04/2006-03/2022
13.280	04/2006-03/2022	12.280	10/2005-03/2022	12.240	10/2005-03/2022
15.280	10/2005-03/2022	15.280	10/2005-03/2022	12.240	10/2005-03/2022
15.240	10/2005-03/2022	12.280	10/2005-03/2022	26.280	04/2006-03/2022
15.280	10/2005-03/2022	13.280	04/2006-03/2022	18.280	10/2005-03/2022
15.240	10/2005-03/2022	18.340	10/2005-03/2022	15.290	10/2005-03/2022
18.250	10/2005-03/2022	15.340	10/2005-03/2022	18.290	10/2005-03/2022
18.250	10/2005-03/2022	26.280	10/2005-03/2022	26.330	10/2005-03/2022
13.290	10/2005-03/2022	12.250	10/2005-03/2022	18.340	10/2005-03/2022
13.250	10/2005-03/2022	15.330	10/2005-03/2022	15.340	10/2005-03/2022
26.290	07/2008-03/2022	12.290	10/2005-03/2022	26.290	10/2005-03/2022

18.250	10/2005-03/2022	18.250	10/2005-03/2022	26.340	10/2005-03/2022
13.250	10/2005-03/2022	18.250	10/2005-03/2022	22.290	10/2005-03/2022
15.290	10/2005-03/2022	26.340	07/2008-03/2022	22.250	10/2005-03/2022
26.340	07/2008-03/2022	18.290	10/2005-03/2022	26.290	07/2008-03/2022
18.240	05/2006-03/2022	22.250	10/2005-03/2022	15.330	10/2005-03/2022
18.250	10/2005-03/2022	22.280	10/2005-03/2022	26.340	10/2005-03/2022
15.250	10/2005-03/2022	15.250	10/2005-03/2022	13.290	10/2005-03/2022
26.290	10/2005-03/2022	18.250	10/2005-03/2022	18.250	10/2005-03/2022
26.340	10/2005-03/2022	12.250	10/2005-03/2022	12.290	10/2005-03/2022
18.240	05/2006-03/2022	22.240	10/2005-03/2022	18.250	10/2005-03/2022
13.280	10/2005-03/2022	13.240	10/2005-03/2022	16.250	04/2008-03/2022
18.250	04/2008-03/2022	16.290	01/2008-12/2023	18.250	04/2008-03/2022
16.250	04/2008-03/2022	16.250	04/2008-03/2022	16.250	04/2008-03/2022
16.290	04/2008-03/2022	16.250	04/2008-03/2022	16.280	05/2005-03/2022
16.290	01/2008-12/2023	16.280	05/2005-03/2022	16.290	01/2008-12/2023
16.240	05/2005-03/2022	16.280	05/2005-03/2022	16.290	01/2008-12/2023
16.290	01/2008-12/2023	16.240	05/2005-03/2022	16.250	04/2008-03/2022
16.290	04/2008-03/2022	16.240	05/2005-03/2022	16.290	01/2008-12/2023
16.250	04/2008-03/2022	16.290	01/2008-12/2023	16.250	04/2008-03/2022
15.320	12/2017-03/2022	18.320	12/2017-03/2022	26.320	12/2017-03/2022
18.320	12/2017-03/2022	15.320	12/2017-03/2022	18.320	12/2017-03/2022
26.320	12/2017-03/2022	18.320	12/2017-03/2022	26.320	12/2017-03/2022
15.320	12/2017-03/2022	15.320	12/2017-03/2022	26.320	12/2017-03/2022

SL II

SL 283 07/2005-10/2006 SL 283 07/2005-10/2006

M 2000 L

11.145 05/1995-08/2006 12.145 LC, LLC, LRC, LLRC 05/2001

12.145 LK, LRK 05/2001 12.185 LK, LRK 05/2001

12.163 04/1995-08/2006 11.163 05/1995-08/2006

12.185 LC, LLC, LRC, LLRC 05/2001

L2000

8.220 FOC,8.220 FOCL 04/1995 10.220 FOC,10.220 FOCL 02/1995

FOC

12.240 08/2007 12.250 08/2004

TGL II

12.250 02/2020 8.250 02/2020 7.250 02/2020 7.250 02/2020

10.220 02/2020 10.220 02/2020 10.250 02/2020 7.250 02/2020

10.220 02/2020 12.220 02/2020 12.220 02/2020 7.220 02/2020

7.220 02/2020 7.220 02/2020 12.250 02/2020 10.250 02/2020

8.250 02/2020 12.250 02/2020 8.220 02/2020 10.250 02/2020

8.250 02/2020 8.220 02/2020 8.220 02/2020 12.220 02/2020

TGM II

15.250 02/2020 15.290 02/2020 13.250 02/2020 19.250 02/2020

19.250 02/2020 13.290 02/2020 18.290 02/2020 26.250 02/2020

13.250 02/2020 15.250 02/2020 26.290 02/2020 18.250 02/2020

26.290 02/2020 18.290 02/2020 18.250 02/2020 13.250 02/2020

12.250 02/2020 15.250 02/2020 13.290 02/2020 26.290 02/2020

26.250 02/2020 18.250 02/2020 15.290 02/2020 15.290 02/2020

19.290 02/2020 19.290 02/2020 19.290 02/2020 12.290 02/2020

26.250 02/2020 18.290 02/2020 19.250 02/2020 12.250 02/2020

12.290 02/2020 13.290 02/2020 12.290 02/2020 12.250 02/2020

NG

NG 262, NG 272 08/1992-07/1998

EM

EM 192 10/1993-06/1997 EM 223 08/1987

VW

CONSTELLATION

15.190 06/2018 17.280 10/2013 13.190 01/2012 17.190 01/2012

31.280 01/2012

WORKER

13.190 01/2012 17.190 10/2013 15.190 01/2012

TEMSA

MD

9 11/2010 9 IC 11/2010

NEOPLAN

Centroliner

N 4509	01/2008-02/2011	N 4516	03/2002-10/2006
N 4509	01/2008-02/2011	N 4509	01/2008-02/2011
N 4509	01/2008-02/2011	N 4516	03/2002-10/2006
N 4516 T	03/2003-04/2008	N 4509	01/2008-02/2011
N 4516 T	03/2003-04/2008	N 4509	01/2008-02/2011
N 4509	01/2008-02/2011	N 4509	01/2008-02/2011
N 4516 T	03/2003-10/2006	N 4509	01/2008-02/2011