SINTLY

SINTLY | STARTER MOTOR **XTLSTR1063**

VOLTAGE **24** V

POWER **6.20** kW

APPLICATIONS KÄSSBOHRER, MERCEDES-BENZ, PEUGEOT, SETRA

DIMENSIONS

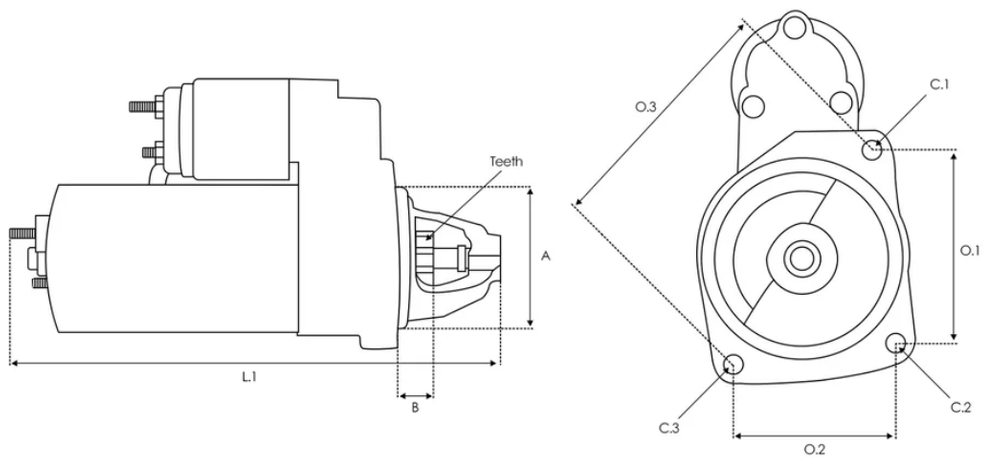

A **92.00 mm** B **48.00 mm** Teeth **11 qty.** L.1 **377.00 mm** O.1 **127.00 mm** O.2 **127.00 mm** O.3 **127.00 mm** C.1 **13.50 mm** C.2 **13.50 mm** C.3 **13.50 mm**

Números OE

Other	0001372005

Código equivalente

3EFFE	STRS689
AINDE	CGB-20880

ANDEL	ANM23100X
AS-PL	S0071 UD105256S
AUTO MAGNETO	AM-2369
BOSCH	0986020880
BTS TURBO	S100981 S100982
CARGO	113608 F032113608
CASCO	CST10675AS CST10675ES CST10675RS
CEVAM	8114
DA SILVA	042596
DELCO	19070033 DRT0880 DT1990
ELECTROLOG	STR1642 STR79586
ELSTOCK	45-3400
ERA	220288
GHIBAUDI	SG0089
HC PARTS	CS1333
HELLA	8EA012586-471 8EA738223-001

ISKRA / LETRIKA	11.139.159 11.139.184 AZJ3439 AZJ3490 IS9143
KRAUF	STB1333
KUHNER	101333 101333P
LOGISTIK	331843
LUCAS	LRS02227 LRS2227
MAHLE	72501110 MS463
MERCEDES	4571510301 457151030180 A4571510301 A457151030180
POWER TRUCK	PTC-4052
POWERMAX	88212535
REAL	20401576BN 20401576EL 20401576RC
RNL	RNL2088 RNL2088T
ROLLCO	STM1234
SANDO	6010675.0 6010675.2 6010675.3
SIDAT	S24BH0065A2
SIOM	MAV126750 MAV126750A

WAI	30114N 551.510.113 551.510.113.010 551.510.113.016 551.510.113.211 551.510.113.340 551.510.113.390 551.510.113.391 S133.313 S153.747
WILMINK GROUP	WG2045234
WOODAUTO	STR50176 WOOSTR50176

Aplicaciones

SETRA

Series 400

TopClass S 415 HDH 10/2001 TopClass S 415 HD 10/2001

TopClass S 415 HD 10/2001 TopClass S 415 HDH 10/2001

TopClass S 415 HDH 10/2001 TopClass S 415 HD 10/2001

TopClass S 416 HDH 10/2002 ComfortClass S 416 GT-HD 10/2003

ComfortClass S 417 GT-HD 10/2003 TopClass S 416 HDH 01/2003

TopClass S 416 HDH 01/2003 ComfortClass S 417 GT-HD 10/2003

ComfortClass S 415 GT-HD 10/2003 TopClass S 415 HDH 10/2001

TopClass S 416 HDH 10/2002 ComfortClass S 417 GT-HD 10/2003

ComfortClass S 416 GT-HD 10/2003 ComfortClass S 416 GT-HD 10/2003

TopClass S 416 HDH 10/2002 ComfortClass S 416 GT-HD 10/2003

ComfortClass S 416 GT-HD 10/2003 ComfortClass S 415 GT-HD 10/2003

ComfortClass S 417 GT-HD 10/2003 TopClass S 417 HDH 10/2003

TopClass S 416 HDH 10/2001
TopClass S 416 HDH 10/2002
TopClass S 417 HDH 10/2003
TopClass S 416 HDH 01/2008
TopClass S 417 HDH 01/2008
TopClass S 415 HD 10/2003
TopClass S 416 HDH 01/2008
TopClass S 415 HDH 01/2008
TopClass S 415 HD 10/2003
TopClass S 415 HD 01/2008
TopClass S 415 HD 01/2008
TopClass S 416 HDH 01/2008
TopClass S 415 HD 01/2008
TopClass S 415 HDH 01/2008
TopClass S 417 HDH 10/2003
TopClass S 415 HD 01/2008
TopClass S 417 HDH 01/2008
ComfortClass S 416 GT-HD 10/2003
TopClass S 415 HDH 01/2008
ComfortClass S 415 GT 10/2003
ComfortClass S 417 GT-HD 10/2003
ComfortClass S 415 GT 10/2003
ComfortClass S 415 GT 10/2003
ComfortClass S 415 GT 10/2003
ComfortClass S 417 GT-HD 10/2003
ComfortClass S 417 GT-HD 10/2003
ComfortClass S 415 GT 10/2003
ComfortClass S 415 GT 10/2003
ComfortClass S 415 GT-HD 10/2003
ComfortClass S 415 GT-HD 10/2003
ComfortClass S 415 GT-HD 10/2003

KÄSSBOHRER

S415GT

12.0 10/2003

S416GT-HD

12.0 10/2003

S417GT-HD

12.0 10/2003

S415GT-HD

12.0 10/2003

S315NF

12.0 03/1996

S313UL

12.0 07/2001 12.0 03/1995

S319NF

12.0 07/2001

S316UL

12.0 07/2001

S319UL

12.0 07/2001

S315H

12.0 07/2001

S317UL

12.0 07/2001

SG321UL

12.0 07/2001

S315UL

12.0 07/2001

PEUGEOT

205 II (20A/C)

1.4 01/1987-07/1988

MERCEDES-BENZ

TRAVEGO (O 580)

O 580-15 RH/RHD 10/1999 O 580-15 RH/RHD 10/1999

O 580-15 RH/RHD 10/1999 O 580-15 RHD 10/1999

O 580-15 RH/RHD 10/1999 O 580-15 RH/RHD 10/1999

O 580-16 RHD, O 580-17 RHD 10/1999 O 580-15 RHD 10/1999

O 580-15 RH/RHD 10/1999 O 580-16 RHD 01/2003

O 580-16 RHD 01/2003 O 580-16 RHD 01/2003 O 580-15 RH 10/1999

O 580-15 RH 01/1999-12/2006 O 580-15 RH 10/1999

O 580-15 RH 10/1999

TOURISMO (O 350)

Tourismo RHD, SHD 09/2003 Tourismo 15 SHD 01/2003

Tourismo 15 SHD 01/2003

O 403

O 403 SHD 09/2003

CITARO (O 530)

Citaro NG 04/2000 Citaro N, Citaro MUE 01/1998

Citaro N, Citaro MUE 01/1998 Citaro NG 06/2000

Citaro N, Citaro MUE 01/1998 Citaro N, Citaro MUE 01/1998

Citaro N, Citaro MUE 01/1998 Citaro GNG 04/2000 Citaro NG 04/2000

Citaro N 01/1998 Citaro NG 06/2000 Citaro N, Citaro MUE 01/1998

Citaro NG 04/2000 Citaro NG 06/2000 Citaro N, Citaro MUE 01/1998

Citaro G 01/1998 Citaro N, Citaro MUE 01/1998

CONECTO (O 345)

CONECTO C, H, M, UE 11/2001 CONECTO 18M 11/2001

CONECTO 18M 11/2001 CONECTO 18M 11/2001

ACTROS

2053 S 04/1996-10/2002 3243 B 04/1997-10/2002

2643 S, 2643 LS 04/1997-10/2002 2643 B 04/1997-10/2002

1831 K 04/1997-10/2002 2031 A 04/1997-10/2002

2635, 2635 L 04/1996-10/2002 3235 B 04/1997-10/2002

1843 AK 04/1997-10/2002 1835 AK 04/1997-10/2002

1840, 1840 L 04/1996-10/2002 3335 B 04/1997-10/2002

3240 B 04/1997-10/2002 3331 K 04/1997-10/2002

2635 K, 2635 LK 04/1997-10/2002 2635 K, 2635 LK 04/1997-10/2002

3348 04/1997-10/2002 2543, 2543 L 09/1996-10/2002

2657 L 04/1997-10/2002 2657 K, 2657 LK 04/1997-10/2002

1848 S, 1848 LS 04/1996-10/2002 3340 04/1997-10/2002

2653 K, 2653 LK 04/1997-10/2002 2031 K 04/1997-10/2002

1840 K 04/1997-10/2002 2631 B 04/1997-10/2002

2540, 2540 L 09/1996-10/2002 2657 K, 2657 LK 04/1997-10/2002

2040 AS 04/1996-10/2002 1853 S, 1853 LS 04/1996-10/2002

3343 K 04/1997-10/2002 1835, 1835 L 04/1996-10/2002

2640 B 04/1997-10/2002 2531, 2531 L 09/1996-10/2002

2531, 2531 L 09/1996-10/2002 1840 S, 1840 LS 04/1996-10/2002

3340 A 04/1997-10/2002 2031 04/1997-10/2002 3331 AK 04/1997-10/2002

3235 K 04/1997-10/2002 3331 AS 04/1997-10/2002

1853, 1853 L 04/1996-10/2002 3343 K 04/1997-10/2002

2040 S 04/1996-10/2002 1835 K 04/1997-10/2002

3331 AK 04/1997-10/2002 2640 S, 2640 LS 09/1996-10/2002

3343 AS 04/1997-10/2002 2653, 2653 L 04/1996-10/2002

3331 B 04/1997-10/2002 3343 04/1997-10/2002 3335 K 04/1997-10/2002

2031 S 04/1996-10/2002 2653 K, 2653 LK 04/1997-10/2002

2631 B 04/1997-10/2002 1857 LS 04/1997-10/2002

2553, 2553 L 09/1996-10/2002 2031 AS 04/1996-10/2002

2031 AS 04/1996-10/2002 1843 K 04/1997-10/2002

1848 K 04/1997-10/2002 1840 AK 04/1997-10/2002

3348 AS 04/1997-10/2002 3340 AK 04/1997-10/2002

1840 S, 1840 LS 04/1996-10/2002 2643 B 04/1997-10/2002

3243 B 04/1997-10/2002 2035 A 04/1997-10/2002 3340 K 04/1997-10/2002

2053 S 04/1996-10/2002 3340 AS 04/1997-10/2002

3335 B 04/1997-10/2002 2040 S 04/1996-10/2002 3235 K 04/1997-10/2002

1843 S, 1843 LS 04/1996-10/2002 1835 K 04/1997-10/2002

3240 B 04/1997-10/2002 1835 S, 1835 LS 04/1996-10/2002

3340 AK 04/1997-10/2002 2035 A 04/1997-10/2002

3343 AS 04/1997-10/2002 3231 B 04/1997-10/2002

3331 S 04/1997-10/2002 3343 AK 04/1997-10/2002

1831, 1831 L 04/1996-10/2002 3340 AS 04/1997-10/2002

3331 AS 04/1997-10/2002 2631, 2631 L 04/1996-10/2002

3231 B 04/1997-10/2002 1831 S, 1831 LS 04/1996-10/2002

2557 L 09/1996-10/2002 1857 LS 04/1997-10/2002

2640 S, 2640 LS 09/1996-10/2002 3343 AK 04/1997-10/2002

1843, 1843 L 04/1996-10/2002 2543, 2543 L 09/1996-10/2002

1831 K 04/1997-10/2002 1848, 1848 L 04/1996-10/2002

1857 L 04/1997-10/2002 2648 S, 2648 LS 09/1996-10/2002

3343 S 04/1997-10/2002 3348 S 04/1997-10/2002 2631 K 04/1997-10/2002

2548, 2548 L 09/1996-10/2002 1840 AK 04/1997-10/2002

2040 AS 04/1996-10/2002 3348 K 04/1997-10/2002

2653 S, 2653 LS 09/1996-10/2002 2631 K 04/1997-10/2002

3331 A 04/1997-10/2002 3340 K 04/1997-10/2002

2648 K, 2648 LK 04/1997-10/2002 1831 S, 1831 LS 04/1996-10/2002

3340 S 04/1997-10/2002 2648, 2648 L 04/1996-10/2002

1835 AK 04/1997-10/2002 1843 AK 04/1997-10/2002

3348 K 04/1997-10/2002 3235 B 04/1997-10/2002

1835 S, 1835 LS 04/1996-10/2002 2643 S, 2643 LS 04/1997-10/2002

2640 B 04/1997-10/2002 3343 S 04/1997-10/2002 2635 B 04/1997-10/2002

2640, 2640 L 04/1996-10/2002 2643, 2643 L 04/1996-10/2002

2040 09/1996-10/2002 2648 K, 2648 LK 04/1997-10/2002

3335 K 04/1997-10/2002 3340 B 04/1997-10/2002 2535 L 09/1996-10/2002

2640 K, 2640 LK 04/1997-10/2002 2643 K, 2643 LK 04/1997-10/2002

2031 K 04/1997-10/2002 3331 04/1997-10/2002

1853 S, 1853 LS 04/1996-10/2002 1843 K 04/1997-10/2002

2648 S, 2648 LS 09/1996-10/2002 3331 B 04/1997-10/2002

1848 AK 04/1997-10/2002 3331 S 04/1997-10/2002

3340 B 04/1997-10/2002 1840 K 04/1997-10/2002

1843 S, 1843 LS 04/1996-10/2002 2653 S, 2653 LS 09/1996-10/2002

1848 K 04/1997-10/2002 2031 S 04/1996-10/2002

1831 AK 04/1997-10/2002 2640 K, 2640 LK 04/1997-10/2002

3331 K 04/1997-10/2002 1848 S, 1848 LS 04/1996-10/2002

2535 L 09/1996-10/2002 1831 AK 04/1997-10/2002

2635 B 04/1997-10/2002 2540, 2540 L 09/1996-10/2002

2643 K, 2643 LK 04/1997-10/2002 4143 K 04/1997-10/2002

4143 AK 04/1997-10/2002 4140 K 04/1997-10/2002

2535 LS 09/1996-10/2002 4143 K 04/1997-10/2002

4143 AK 04/1997-10/2002 4148 K 04/1997-10/2002

4140 K 04/1997-10/2002 3353 AS 04/1997-10/2002

4143 K 04/1997-10/2002 3353 04/1997-10/2002 3357 S 04/1997-10/2002

2553 LS 09/1996-10/2002 4140 AK 04/1997-10/2002

2531 LS 09/1996-10/2002 4140 K 04/1997-10/2002

2531 LS 09/1996-10/2002 2540 LS 09/1996-10/2002

2040 AK 09/1996-10/2002 3353 AS 04/1997-10/2002

2031 AK 09/1996-10/2002 2543 LS 09/1996-10/2002

3353 AS 04/1997-10/2002 4143 K 04/1997-10/2002

2040 AK 09/1996-10/2002 2540 LS 09/1996-10/2002

4140 K 04/1997-10/2002 4140 AK 04/1997-10/2002

2553 LS 09/1996-10/2002 3353 S 04/1997-10/2002

2543 LS 09/1996-10/2002 2535 LS 09/1996-10/2002

2031 AK 09/1996-10/2002 2548 LS 09/1996-10/2002

2548 LS 09/1996-10/2002 3357 S 04/1997-10/2002

3353 S 04/1997-10/2002 3240 04/1997-10/2002 3235 04/1997-10/2002

3243 04/1997-10/2002 2043 AS 04/1996-10/2002 4148 K 04/1997-10/2002

3243 K 04/1997-10/2002 3240 04/1997-10/2002 3240 K 04/1997-10/2002

2043 AS 04/1996-10/2002 2657 S, 2657 LS 04/1997-10/2002

4140 B 04/1997-10/2002 3240 K 04/1997-10/2002 4140 B 04/1997-10/2002

2048 AS 04/1996-10/2002 3335 04/1997-10/2002 3231 K 04/1997-10/2002

2657 S, 2657 LS 04/1997-10/2002 3357 04/1997-10/2002

3243 K 04/1997-10/2002 3243 04/1997-10/2002 3335 S 04/1997-10/2002

2035 S 04/1996-10/2002 4148 AK 04/1997-10/2002

2035 S 04/1996-10/2002 2043 AS 04/1996-10/2002

3231 K 04/1997-10/2002 3235 04/1997-10/2002

ACTROS MP2 / MP3

2644 K, LK 04/2003 1854 LS 04/2003 2650 K, 2651 K, LK 04/2003

2658 LS 04/2003 2632, L, LL 04/2003 2041 K 04/2003

2044 S 04/2003 1841 LS, LLS 04/2003 4144 K 04/2003

4144 K 04/2003 2654 S, LS 04/2003 2044 04/2003

2532, L, LL 04/2003 1832 K 04/2003 2032 AK 04/2003

2654 K, LK, 2655 K, LK 04/2003 1850 AK, 1851 AK 04/2003

2032 K 04/2003 2036 A, AE 04/2003 2644 S, LS 04/2003

2032 S 04/2003 3341 04/2003 2654 K, LK, 2655 K, LK 04/2003

3332 K 04/2003 3332 K 04/2003 4140 K 04/2003 2032 AK 04/2003

3331 A, 3332 A 04/2003 3332 K 04/2003 2036 A, AE 04/2003

1832, LS, LLS 04/2003 4140 K 04/2003 3231 K, 3232 K 04/2003

2644 S, LS 04/2003 3336 A 04/2003 2032 AK 04/2003

2032 A, AE 04/2003 3331 A, 3332 A 04/2003 2041 K 04/2003

2041 04/2003 2650 K, 2651 K, LK 04/2003 2636, L, LL 04/2003

2032 AS 04/2003 2658 L 04/2003 2654 S, LS 04/2003

2536, L, LL 04/2003 2044 04/2003 2036 A, AE 04/2003

2041 04/2003 2636 K, LK 04/2003 1850, 1851 K 04/2003

2536, L, LL 04/2003 1832 K 04/2003 2644, L, LL 04/2003

2041 AS 04/2003 3341 04/2003 2632 LS 04/2003 3336 K 04/2003

2044 S 04/2003 2636 K, LK 04/2003 3336 A 04/2003

2644, L, LL 04/2003 3350, 3351 04/2003 2650 S, LS 04/2003

1832, L, LL 04/2003 3231 K, 3232 K 04/2003 1858, L 04/2003

2636, L, LL 04/2003 4140 K 04/2003 1844, L, LL 04/2003

3341 04/2003 2041 S 04/2003 2041 AK 04/2003

2641 S, LS 04/2003 2658 K, LK 04/2003 3354, 3355 04/2003

1832 K 04/2003 2544, L, LL 04/2003 1841 K 04/2003 3344 04/2003

2036 S 04/2003 3344 04/2003 2032 K 04/2003 1844 K 04/2003

2044 AS 04/2003 3331 AK, 3332 AK 04/2003

1850, 1851 LS, LLS 04/2003 2641 K, LK 04/2003 2644 S, LS 04/2003

2532, L, LL 04/2003 2036 AS 04/2003 2036 S 04/2003

2632 K, LK 04/2003 1854, L 04/2003 4140 AK 04/2003

1836 K 04/2003 1854, L 04/2003 2641 S, LS 04/2003

1832, LS, LLS 04/2003 1836 AK 04/2003 3332 K 04/2003

3331 A, 3332 A 04/2003 2636 LS 04/2003 3331 AK, 3332 AK 04/2003

2644, L, LL 04/2003 4140 AK 04/2003 1850 AK, 1851 AK 04/2003

2644 K, LK 04/2003 1841, L, LL 04/2003 2532, L, LL 04/2003

3344 04/2003 2632, L, LL 04/2003 2041 AK 04/2003

2654, L, 2655, L, LL 04/2003 2536, L, LL 04/2003 1832 AK 04/2003

2636 LS 04/2003 3331 AK, 3332 AK 04/2003 2644 S, LS 04/2003

2636 LS 04/2003 2636, L, LL 04/2003 1841 LS, LLS 04/2003

1836 K 04/2003 1836 LS, LLS 04/2003 4140 K 04/2003

3331 A, 3332 A 04/2003 3331 A, 3332 A 04/2003 2641 K, LK 04/2003

3331, 3332 04/2003 1850, 1851, L, LL 04/2003 1844 AK 04/2003

3336 04/2003 2541, L, LL 04/2003 1858 LS 10/2002

2036 AS 04/2003 2032 A, AE 04/2003 2632 LS 04/2003

1844 LS, LLS 04/2003 2654, L, 2655, L, LL 04/2003 1844, L, LL 04/2003

1844 LS, LLS 04/2003 2032 AK 04/2003 2536, L, LL 04/2003

2041 AS 04/2003 1841 K 04/2003 2650, L, 2651,L, LL 04/2003

2041 04/2003 2541, L, LL 04/2003 1850, 1851, L, LL 04/2003

2032 04/2003 1844 AK 04/2003 3231 K, 3232 K 04/2003

1836, L, LL 04/2003 3231 K, 3232 K 04/2003 1850 AK, 1851 AK 04/2003

1841 K 04/2003 2541, L, LL 04/2003 1844 K 04/2003

2541, L, LL 04/2003 2041 S 04/2003 2050 S 04/2003

4140 AK 04/2003 3331, 3332 04/2003 2632 LS 04/2003

3350, 3351 04/2003 2041 K 04/2003 2632, L, LL 04/2003

1841 LS, LLS 04/2003 2032 04/2003 2036 04/2003

1832 AK 04/2003 2044 AS 04/2003 4144 K 04/2003

2532, L, LL 04/2003 2044 S 04/2003 2032 K 04/2003

2636 K, LK 04/2003 3354, 3355 04/2003 2641, L, LL 04/2003

2036 04/2003 2032 S 04/2003 2544, L, LL 04/2003

2544, L, LL 04/2003 2044 04/2003 1841, L, LL 04/2003

1844 AK 04/2003 1850 AK, 1851 AK 04/2003 2641 S, LS 04/2003

3336 A 04/2003 1841, L, LL 04/2003 2041 K 04/2003

2032 AS 04/2003 1850, 1851 K 04/2003 2041 AK 04/2003

2044 S 04/2003 2032 A, AE 04/2003 2041 S 04/2003

2641, L, LL 04/2003 4140 AK 04/2003 1844 LS, LLS 04/2003

3336 04/2003 2050 S 04/2003 2632 K, LK 04/2003

3331 A, 3332 A 04/2003 1844 AK 04/2003 2032 K 04/2003

2641 K, LK 04/2003 2041 AK 04/2003 2032 AK 04/2003

1836 K 04/2003 1844, L, LL 04/2003 1850, 1851 LS, LLS 04/2003

1836 AK 04/2003 2644 K, LK 04/2003 1832, L, LL 04/2003

2632 K, LK 04/2003 3241 04/2003 2641, L, LL 04/2003

2536, L, LL 04/2003 1844 K 04/2003 3336 A 04/2003

2041 S 04/2003 1844 K 04/2003 3241 04/2003 1832 AK 04/2003

3241 04/2003 2544, L, LL 04/2003 3341 AKE 04/2003

3344 A 04/2003 3341 K 04/2003 2044 AK 04/2003 3344 A 04/2003

2536 LS 04/2003 3344 S 04/2003 2536 LS 04/2003 3332 B 04/2003

2044 K 04/2003 3336 B 04/2003 3236 K 04/2003 3344 K 04/2003

2036 AK 04/2003 2044 K 04/2003 4144 B 04/2003

3331 S, 3332 S 04/2003 3344 A 04/2003 2636 B 04/2003

3236 K 04/2003 3341 AS 04/2003 3341 AKE 04/2003

2044 K 04/2003 1836 A 10/2002 3336 AKE 04/2003

3344 B 04/2003 4144 AK 04/2003 4141 B 04/2003 2532 LS 04/2003

2636 B 04/2003 3344 A 04/2003 2532 LS 04/2003 3336 B 04/2003

3344 S 04/2003 2536 LS 04/2003 3332 AKE 04/2003

3341 S 04/2003 4144 B 04/2003 3344 AKE 04/2003 4144 K 04/2003

3341 AS 04/2003 3232 B 04/2003 3341 S 04/2003 2536 LS 04/2003

3341 S 04/2003 3341 B 04/2003 3341 AS 04/2003 2544 LS 04/2003

3241 B 04/2003 3236 B 04/2003 2036 AK 04/2003 3232 B 04/2003

2532 LS 04/2003 2044 K 04/2003 2641 B 04/2003 3341 A 04/2003

3331 S, 3332 S 04/2003 3341 AS 04/2003 2541 LS 04/2003

2632 B 04/2003 4141 B 04/2003 4144 B 04/2003 2644 B 04/2003

2036 K 04/2003 3341 B 04/2003 3344 A 04/2003 3336 K 04/2003

2036 K 04/2003 3341 K 04/2003 2541 LS 06/2008 3341 S 04/2003

4144 K 04/2003 2541 LS 04/2003 2641 B 04/2003 2641 B 04/2003

3336 B 04/2003 3344 K 04/2003 2036 K 04/2003 4144 AK 04/2003

2036 K 04/2003 3351 AK 04/2003 3351 AK 04/2003

3336 AKE 04/2003 3336 S 04/2003 2544 LS 04/2003

2644 B 04/2003 3344 AKE 04/2003 2632 B 04/2003

2044 AK 04/2003 2544 LS 04/2003 2636 B 04/2003 3344 B 04/2003

3241 K 04/2003 3331 S, 3332 S 04/2003 3332 B 04/2003

2048 AS 04/2003 2036 AK 04/2003 3336 S 04/2003 2644 B 04/2003

2036 AK 04/2003 3241 K 04/2003 3341 B 04/2003 3236 B 04/2003

2632 B 04/2003 3332 B 04/2003 2044 AK 04/2003 3344 S 04/2003

3241 B 04/2003 3336 K 04/2003 3358 04/2003 2554 LS 04/2003

4150 K 04/2003 2040 10/2002 4150 K 04/2003 2040 10/2002

2054 S 04/2003 4140 B 04/2003 4150 AK 04/2003 4140 B 04/2003

2550, LS 04/2003 2550 LS 04/2003 2558, L 04/2003 4141 06/2008

2554, L 04/2003

AXOR 2

3340 B 10/2004-10/2005 4140 K 06/2009 3340 B 10/2004-10/2005

2635 B 10/2005 2635 B 10/2005 4135 K 06/2009 4135 K 06/2009

4143 K 06/2009 3335 B 10/2004-10/2005 4140 K 06/2009

4143 K 06/2009 2635 B 10/2005 3335 B 10/2004-10/2005

2635 B 10/2005