SINTLY

SINTLY | STARTER MOTOR **XTLSTR3002**

VOLTAGE **12** V

POWER **0.90** kW

APPLICATIONS HYUNDAI, KIA, MITSUBISHI, PROTON, VOLVO PENTA

DIMENSIONS

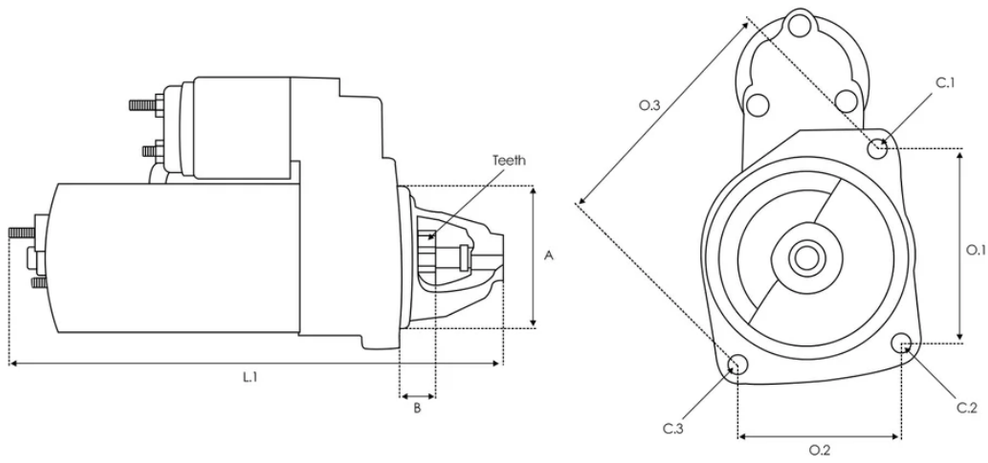

A **77.00 mm** B **18.00 mm** Teeth **8 qty.** L.1 **191.00 mm** O.1 **105.00 mm** C.1 **M10x1.75 mm** C.2 **M10x1.75 mm**

Números OE

HYUNDAI / KIA	3610011110

Código equivalente

3EFFE	STRF089 STRS034 STRS970
AINDE	CGB-22301 CGB-22871 CGB-23013

	CGB-23139
ANDEL	ANM15091X
AS-PL	S5002
ASHIKA	003-C100-1 003-C104 003-C126 003-C130 003-C134 003-M935
AUTO MAGNETO	AM-2056 AM-SM801
AUTOELECTRO	AES5115
BOSCH	0986012301 0986012871 0986017691
CARGO	110158 F032110158
CASCO	CST35105AS CST35105GS
DAF	1516956R 1516957R
DELCO	DRS2172 DRS2301 DRS2301N DRS2871
DENSO	128000-0461 128000-0462
ELECTROLOG	STR5006 STR8701
ELSTOCK	25-0298 25-3025 25-3233
ERA	220078 220382 220391
GALLOPER	36100-22800

HALLA	HSC107100
HC PARTS	JS349 JS350
HELLA	8EA726441-001 8EA726442-001
HERTH+BUSS	J5210509 J5215005 J5215027
HYUNDAI / KIA	36100-11120 36100-11130 36100-11140 36100-11150 36100-21740 36100-22000 36100-22805 36100-22810 36100-26800 361001120 361001130
ISKRA / LETRIKA	ISJ0001
JAPANPARTS	MTC100-1 MTC104 MTC126 MTC130 MTC134 MTM935
JAPKO	3C1001 3C104 3C126 3C130 3C134 3M935
KIOTI	E5205-63012
KUHNER	20349 20349L 20350 20643
LAUBER	22.0349 22.5349M 22.5350
LUCAS	LRS00473 LRS00515 LRS00516 LRS02114 LRS2114 LRS473 LRS515 LRS516
MANDO	M39646 MC109018 MC109025

MITSUBISHI	M002T40081 M002T44081 M002T44681 M002T47281 M002T49881 M003T22581 M003T22582 M003T25781 M003T25782 M003T25783 M003T25785 M003T25881 M003T25882 M003T25883 M003T25885 M003T32581 M003T32582 M003T32583 M003T32584 M003T32585 M003T32588 M003T32589 M003T32591 M003T32592 M003T32593 M003T41081 M003T41083 M003T41088 M003T41282 M003T41285 M003T47281 M0TD1771 M2T40081 M2T44081 M2T44681 M2T47281 M2T49881 M3T22581 M3T22582 M3T25781 M3T25782 M3T25783 M3T25785 M3T25881 M3T25882 M3T25883 M3T25885 M3T32581 M3T32582 M3T32583 M3T32584 M3T32585 M3T32588 M3T32589 M3T32591 M3T32592 M3T32593 M3T41081 M3T41083 M3T41088 M3T41282 M3T41285 M3T47281 M4T74281 MD001333 MD001555 MD016920 MD016921 MD021674 MD021678 MD021685 MD027400 MD027401 MD034120 MD034121 MD034212 MD066761 MD081567 MD081568 MD085730 MD085731 MD100431 MD100481 MD101219 MD107615 MD161437 MD162836 MD162837 MD180238 MD192227 MD316001 MDO21665 MDO27400 PW501783
PERKINS	185086540 185086820
PRESTOLITE	66925210 66925301 S1119M S1120M
PROTON	PSW501777
REAL	20437501BN 20437501OE
RNL	RNL104CS RNLM3T22581

SANDO	6035105
SIDAT	S12MH0843A2
SIOM	ALT136080 MAV371150 MAV6050 MAV7280
STARDAX	STX200127 STX200127R STX200159 STX200159R STX200249 STX200249R STX200298 STX200298R STX200337 STX200337R STX200608 STX201022 STX201152 STX201152R
STARLINE	SX 2219
VALEO	438097 438105 455561 455562 455607 455963 VS226
VOLVO PENTA	3803437
WAI	16940N
WOODAUTO	STR71028

Aplicaciones

MITSUBISHI

LANCER I Station Wagon (A7_V)

1.4 (A72V) 01/1978-09/1979

LANCER F (A15_)

1.4 GLX (A172) 03/1983-01/1984 1.4 Turbo (A156) 03/1983-01/1984

1.2 GLX (A171) 03/1983-01/1984

LANCER I (A7_)

1.2 (A75A) 01/1978-09/1979

1.4 (A72A) 01/1978-09/1979

1.6 (A73A) 01/1978-09/1979

TREDIA (A21_)

1.6 Turbo (A212) 09/1982-05/1985

1.6 Turbo (A212) 09/1982-07/1984

1.6 GLS (A212) 09/1982-10/1987

1.8 Turbo (A215A) 08/1984-07/1986

2.0 GLXi 4WD 10/1986-03/1988

1.4 GLX (A211) 10/1982-08/1985

1.8 GLS (A215) 08/1984-07/1986

1.8 GLS 4WD (A215G) 04/1985-07/1986

CORDIA (A21_A, AB, AC)

1.6 Turbo (A212A) 07/1983-05/1985

1.6 GSL (A212A) 10/1982-12/1986

1.6 Turbo (A212A) 10/1982-05/1985

1.8 GSL (A215A) 10/1986-07/1989

1.8 Turbo ECi (A213A) 10/1984-07/1989

COLT I (A15_A)

1.4 Turbo (A152A) 09/1981-01/1984

1.2 GL (A151A) 12/1978-01/1984

1.4 GLX, GT (A152A) 05/1979-01/1984

1.4 GLX,GT (A152, A156) 01/1981-10/1982

SAPPORO II (A16_A)

2.0 Turbo ECi (A164) 08/1982-08/1983

1.6 GLX (A161A) 08/1980-09/1984

2.0 GSL (A164A) 08/1980-08/1983

2.0 GSR (A164A) 08/1980-09/1984

GALANT III Station Wagon (A12_V)

1.6 GL (A121V) 01/1979-08/1980

2.0 GLX (A123V) 01/1979-08/1980

LANCER V (CB_A, CD_A, CE_A)

1.8 GTi (CB5A) 07/1991-07/1993 1.3 (CB1A) 06/1992-12/1996

1.3 (CB1A) 06/1992-02/1995

L 300 / DELICA II Bus (L03_P/G, L0_2P)

1.6 (L032P, L062P) 11/1984-02/1987 1.6 (L032P, L062P) 09/1981-10/1986

2.0 4WD (L037G) 11/1986-02/1987 1.8 4WD (L035G) 08/1984-02/1987

GALANT IV (A16_)

2.0 GLS (A163) 09/1980-05/1984 1.6 GLX (A161A) 09/1980-05/1984

2.0 Turbo ECi (A164) 05/1982-05/1984

L 300 III Bus (P0_W, P1_W, P2_W, P3_W)

2.0 (P03W, P13W) 11/1986-05/2004

2.0 4WD (P23W, P03W, P13W) 11/1986-05/2004

2.4 4WD (P24W) 08/1986-05/2004 2.4 4WD (P24W) 11/1986-12/1990

1.6 (P02W, P12W) 11/1986-05/2004 2.0 (P03W, P13W) 11/1986-05/2004

2.0 4WD (P23W, P03W, P13W) 12/1986-05/2004

2.4 (P04W, P14W) 11/1990-05/2004

2.0 i (P00W, P03W, P13W) 06/1994-10/1998

COLT II (C1_A)

1.2 EL, GL (C15A) 02/1984-09/1986 1.5 GLX (C12A) 09/1985-04/1988

1.5 GLX (C12A) 09/1984-04/1988 1.6 Turbo ECi (C13A) 02/1984-04/1988

1.2 EL, GL (C15A) 09/1986-04/1988 1.6 Turbo ECi (C13A) 07/1986-04/1988

1.3 EL,GL (C11A) 06/1986-04/1988

GALANT VI (E3_A)

2.0 (E39A, E38A, E33A) 04/1989-10/1992

2.0 GTI 16V (E39A, E38A, E33A) 11/1988-10/1992

1.8 (E32A) 11/1988-10/1992

2.0 4WD (E33A, E38A, E39A) 04/1989-10/1992

1.8 11/1988-10/1992

LANCER IV Hatchback (C6_A, C7_A)

1.8 GTi 16V (C68A) 11/1989-05/1992

1.8 GTi 16V (C69A) 06/1992-12/1993

1.6 16V (C76A, C66A) 06/1992-05/1994

1.5 12V (C62A) 05/1989-05/1992

1.8 4WD (C77A) 09/1989-06/1992

1.3 12V (C61A) 06/1992-05/1994

1.5 (C62A) 06/1988-05/1992

LANCER III (C1_A, C6_A)

1.2 (C65A) 08/1986-04/1988

1.5 GLX (C12AS) 06/1985-04/1988

1.5 GLX (C12AS) 11/1983-04/1988

1.2 GL (C15AS) 01/1984-10/1986

LANCER III Station Wagon (C1_V, C3_V)

1.8 4WD (C37V) 08/1990-06/1992

1.5 (C12V) 09/1988-12/1990

1.8 4WD (C37V) 01/1987-12/1987

1.8 D (C14V) 09/1985-09/1986

1.5 (C12V) 09/1985-12/1987

1.5 12V (C12V) 09/1990-12/1991

1.8 4WD (C37V) 01/1987-08/1989

1.5 (C12V) 09/1985-08/1989

1.8 4WD (C37V) 03/1989-12/1990

1.8 D (C14V) 08/1986-06/1992

SPACE WAGON (N3_W, N4_W)

1.8 4WD (N41W) 10/1991-10/1998

2.0 (N33W) 10/1992-10/1998

2.0 4WD (N43W) 10/1992-10/1998

1.8 (N31W) 10/1991-10/1998

COLT III (C5_A)

1.8 GTi 16V Cat (C58A) 06/1990-05/1992

1.3 GL (C61A) 04/1988-12/1990

1.5 GLXi (C52A) 04/1988-05/1992

1.3 12V (C51A) 04/1988-05/1992

1.3 (C51A) 04/1988-05/1992

1.6 GTi 16V (C53A) 04/1988-05/1990

1.5 Cat (C52A) 07/1990-05/1992

COLT IV (CA_A)

1.3 GLi 12V (CA1A) 04/1992-04/1996

1.6 GLXi 16V (CA4A) 04/1992-04/1996

1.8 GTi 16V (CA5A) 04/1992-04/1996

1.6 4WD (CC4A) 08/1993-08/1995

GALANT VI Saloon (E3_A)

2.0 GTI 16V Cat 4WD (E38A, E39A, E33A) 09/1991-10/1992

2.0 GTi 16V (E39A, E38A, E33A) 11/1987-10/1992

2.0 (E39A, E38A, E33A) 11/1987-10/1992

2.0 4WD (E39A, E38A, E33A) 12/1988-10/1992

1.8 (E32A) 11/1987-08/1990

1.8 (E32A) 11/1987-10/1992

2.0 GTi 16V 4WD (E39A, E38A, E33A) 06/1988-10/1992

2.0 GTi 16V (E39A, E38A, E33A) 11/1988-10/1992

1.6 (E31A) 01/1988-10/1992

LANCER V Station Wagon (CB_W, CD_W)

1.6 16V (CB4W) 12/1992-10/2003

1.6 16V 4WD (CD4W) 12/1992-10/2003

GALANT V (E1_A)

2.0 Turbo ECi (E15A) 06/1984-04/1990

1.6 GLX (E11A) 06/1984-04/1990

2.0 GLS (E15A) 06/1984-04/1990

2.0 GLS (E15A) 06/1986-04/1990

GALANT IV Station Wagon (A16_V)

1.6 GLX (A161V) 09/1980-05/1984

2.0 GLX (A163V) 09/1980-06/1983

SAPPORO I (A12_)

2.0 (A123) 04/1978-07/1980

2.0 (A123) 01/1979-07/1980

1.6 SL, GL (A121) 04/1978-07/1980

GALANT VII Saloon (E5_A, E7_A, E8_A)

2.0 GLSI 4WD (E75A) 11/1992-08/1996 2.0 GLSI (E55A) 11/1992-08/1996

2.0 GLSTD (E57A) 11/1992-08/1996 2.0 11/1992-08/1996

SPACE RUNNER MPV (N1_W, N2_W)

1.8 4WD (N21W) 10/1991-08/1999 1.8 (N11W) 10/1991-08/1999

1.8 (N11W) 06/1996-08/1999 1.8 4WD (N21W) 06/1996-08/1999

SPACE WAGON (D0_V/W)

2.0 GLX 4WD (D08W) 06/1986-05/1988 1.8 GLX (D05V, D05W) 01/1984-12/1988

2.0 GLXi 4WD (D08W) 06/1988-04/1991 2.0 4WD (D08W) 03/1985-04/1991

2.0 GLXi (D04W) 06/1988-04/1991 2.0 GLX (D04W) 06/1986-05/1988

1.8 4WD (D05V, D05W) 10/1987-08/1988

LANCER IV (C6_A, C7_A)

1.5 (C62A) 04/1988-05/1992 1.3 (C61A) 08/1988-05/1992

1.3 12V (C61A) 07/1990-06/1992 1.3 (C61A) 08/1988-05/1992

1.3 (C61A) 04/1988-05/1992 1.5 12V (C62A) 06/1990-05/1992

1.6 GTi (C63A) 05/1988-05/1990

GALANT VII (E5_A, E7_A, E8_A)

2.0 GLSI 4WD (E75A) 11/1992-08/1996 2.0 GLSI (E55A) 11/1992-08/1996

L 300 III Van (P0_V, P1_V, P2_V)

1.6 (P12V, P02V) 11/1986-05/1994 2.0 (P03V, P13V) 11/1986-05/1996

2.4 4WD (P24V, P24W) 11/1986-08/1997 2.4 (P24V, P24W) 11/1986-08/1997

2.0 4WD (P23W, P23V) 08/1988-05/1994

2.4 4WD (P24V, P24W) 11/1986-08/1997 2.4 (P24V, P24W) 11/1986-08/1997

2.0 (P03V, P13V) 06/1994-05/1996

LANCER II (A17_)

1.6 (A174) 01/1981-02/1983

1.4 GLX (A172) 09/1979-02/1983

1.6 (A174) 09/1979-02/1983

1.2 (A171) 01/1980-12/1981

LANCER CELESTE Coupe (A7_)

2.0 GSR (A78A) 01/1979-06/1981

2.0 GSR (A78A) 10/1975-06/1981

1.6 ST (A73A) 01/1977-06/1981

GALANT III (A12_)

1.6 (A121) 01/1977-08/1980

2.0 GLX 01/1977-08/1980

2.0 (A123) 01/1979-08/1980

L 300 / DELICA II Van (L03_P)

1.6 (L032P, L062P) 05/1980-10/1986

LANCER VI (CJ_, CP_)

1.3 12V (CK1A) 12/1995-08/2003

PAJERO I Canvas Top (L04_G)

2.6 (L042G, L047G) 01/1983-11/1990

2.6 (L042G, L047G) 01/1983-11/1990

L400 Bus (PD_W, PC_W, PA_V, PB_V, PA_W)

2.0 16V (PA3V/W, PB3V, PA3W) 05/1995-05/2000

2.0 (PA3W) 09/1995-10/2002

STARION (A18_A)

2.0 Turbo ECi (A183A) 06/1982-12/1985

2.0 Turbo ECi (A183A) 05/1985-08/1987

L200 (K7_T, K6_T, K5_T)

2.0 (K62T) 06/1996-12/2007

L 300 III Platform/Chassis (P1_T)

2.0 (P13T) 07/1994-04/2000

L 300 / DELICA II Platform/Chassis (L03_P)

1.6 (L032P, L062P, L036P) 04/1983-04/1994

PAJERO II Canvas Top (V2_C, V4_C)

2.4 (V21C) 04/1991-04/2000

PAJERO II (V3_W, V2_W, V4_W, V5_W)

2.4 (V21W) 04/1991-10/1999

SANTAMO (UG)

2.0 16V 05/1999-12/2004 2.0 16V 4WD 05/1999-12/2004

L400 Van (PD_W, PC_W, PB_V, PA_W, PA_V)

2.0 06/1996-03/2001

ECLIPSE I (D2_A)

1.8 (D21A) 12/1989-03/1994

PAJERO I (L04_G, L14_G)

2.6 4WD (L042G, L047G) 01/1983-09/1987

L200 (K3_T, K2_T, K1_T, K0_T)

2.0 4WD 02/1987-05/1994 2.4 09/1989-10/1996

DELICA / SPACE GEAR

2.0 (PA3V) 09/1995-10/2002

SPACE WAGON VAN (D0_V/W)

1.8 (D05V) 06/1986-12/1988

HYUNDAI

PONY Wagon

1.2 02/1978-06/1986 1.4 02/1978-06/1986

PONY (X-2)

1.5 10/1989-01/1995 1.5 i 10/1989-01/1995 1.5 i 10/1989-01/1995

1.3 10/1989-01/1995 1.5 10/1989-01/1995

S COUPE (SLC)

1.5 i 04/1992-05/1996 1.5 i 02/1990-05/1996 1.5 i Turbo 04/1991-05/1996

PONY / EXCEL Saloon (X-2)

1.5 i 01/1990-01/1995 1.3 09/1989-08/1994 1.5 01/1990-01/1995

1.5 i 01/1990-01/1995 1.5 01/1990-01/1995 1.3 01/1990-01/1995

1.3 12/1992-09/1994

SONATA III (Y-3)

2.0 i 16V 05/1993-06/1998 2.0 i 06/1994-08/1996

2.0 i 16V 06/1996-06/1998 1.8 i 05/1993-06/1998

SONATA II (Y-2)

2.0 i 16V 01/1991-10/1993 2.0 i 01/1991-10/1993 1.8 i 09/1988-10/1993

2.0 i 09/1988-08/1991

LANTRA I (J-1)

1.5 i.e. 10/1990-11/1995

ACCENT II Saloon (LC)

1.5 01/2000-12/2006 1.3 01/2000-11/2005 1.5 01/2000-11/2005

1.6 12/2002-11/2005 1.5 09/1999-10/2002

PONY (X-1)

1.3 10/1985-09/1989 1.5 (X-1) 10/1985-09/1989

PONY Saloon (X-1)

1.5 10/1985-09/1989 1.3 10/1985-09/1989

ACCENT II (LC)

1.3 01/2000-11/2005 1.5 01/2000-11/2005 1.5 09/2000-02/2003

1.3 08/2002-11/2005 1.6 12/2002-11/2005 1.5 01/2000-10/2002

1.5 09/1999-10/2002

ELANTRA III (XD)

1.6 06/2000-07/2006 1.6 05/2003-07/2006 1.6 06/2000-07/2006

SANTAMO

2.0 16V 4x4 05/1999-12/2002 2.0 16V 05/1999-12/2002

2.0 10/1998-10/2002

PONY

1.4 08/1977-12/1985 1.2 06/1974-12/1982

ELANTRA III Saloon (XD)

1.6 06/2000-07/2006 1.6 05/2003-05/2006 1.6 06/2000-07/2006

SANTA FÉ I (SM)

2.0 08/2001-03/2006

GETZ (TB)

1.6 09/2002-09/2005 1.3 i 09/2002-03/2004 1.3 09/2003-09/2005

COUPE II (GK)

1.6 16V 03/2002-08/2009

ACCENT III (MC)

1.4 GL 11/2005-11/2010

ACCENT III Saloon (MC)

1.4 GL 11/2005-11/2010

ACCENT I (X-3)

1.3 10/1994-01/2000
1.5 i 16V 12/1995-01/2000
1.5 i 12V 10/1994-01/2000
1.3 10/1994-01/2000
1.3 i 12V 10/1994-01/2000
1.3 10/1994-01/2000
1.5 10/1994-12/1997

ACCENT Saloon (X-3)

1.3 i 12V 10/1994-01/2000
1.5 i 16V 10/1995-01/2000
1.3 10/1994-01/2000
1.5 i 12V 10/1994-01/2000
1.3 10/1994-01/2000
1.3 10/1994-01/2000

COUPE I (RD)

1.6 16V 03/1998-04/2002
1.6 i 16V 12/1996-04/2002

LANTRA II (J-2)

1.5 12V 12/1996-09/2000

LANTRA II Estate (J-2)

1.5 12V 04/1997-10/2000

VOLVO PENTA

Engine 01/1993

PROTON

PERSONA 400 (C9_S)

415 GLi/GLSi 01/1994-07/2000

413 01/1994-06/2003

PERSONA 400 Hatchback (C9_C, C9_S)

413 GLSi 01/1994-01/2000

415 GLi/GLSi 01/1994-07/2000

416 i 12/1995-07/2000

PERSONA 300 (C9_M)

315 GLSi 09/1996-07/2000

313i 03/1996-01/2000

315 GLi/GLSi 03/1996-07/2000

WIRA Hatchback (C9_L)

1.3 08/2000-06/2007

1.5 08/2000-06/2007

1.3 08/2000-06/2007

SATRIA (C9_M)

1.5 (C97M) 07/2000-05/2006

WIRA

1.5 08/2000

KIA

JOICE (MTE1P)

2.0 02/2000-09/2003

2.0 09/2001-09/2003