SINTLY

SINTLY | STARTER MOTOR

XTLSTR4005

VOLTAGE 12 V

POWER 1.00 kW

APPLICATIONS CITROËN, PEUGEOT

DIMENSIONS

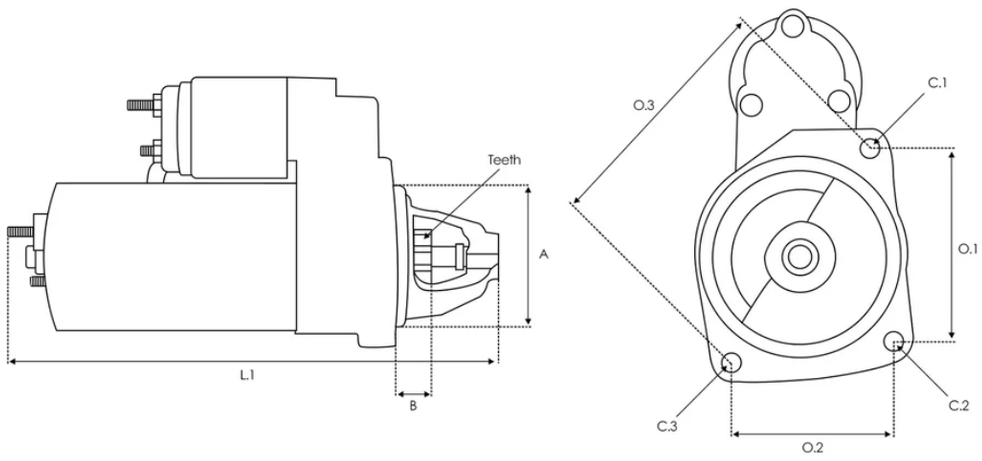

A 55.00 mm B -6.00 mm Teeth 9 qty. L.1 169.00 mm O.1 85.00 mm O.2 120.00 mm O.3 85.00 mm C.1 9.50 mm C.2 9.50 mm C.3 M8x1.25 mm

Números OE

PEUGEOT	580298

Código equivalente

3EFFE	PRSL083 STRL083
AS-PL	S3032

AUTO MAGNETO	AM-2409G
AUTOELECTRO	AES7137 NES7137
BOSCH	0001112019 0001112029 0986013850 F000AL0327
CARGO	110584 116306 F032110584 F032116306
CASCO	CST15145AS CST15145GS CST15145RS
CEVAM	3611
DAF	1516758R
DELCO	DRS3545 DRS3545N DS4655 DS4655N RAS34656
EAI	11856
ELECTROLOG	STR0039 STR0046 STR0084
ELSTOCK	25-1254
ERA	220012 220392
FIAT	71794532 9608719280 9626261480 K9609313280
FORD	3960404

GHIBAUDI	SG0396
HC PARTS	CS390 CS581
HELLA	8EA011610-441 8EA726205-001
HERTH+BUSS	42455962
IKA	6.0011.9 6.0170.9
ISKRA / LETRIKA	11.130.965 AZE1212 IS0529
KUHNER	101111 101111V
LUCAS	LRS00737 LRS737
MAGNETI MARELLI	063521120410 063720390010 943253115010 944280138500 944280179300 MQS390 MRS17930 MSR5315
MAHLE	72735810 MS182
MITSUBISHI	M000T45071 M000T45071AM M000T45071ZT M002T13081 M003T40371 M0T45071 M0T45071AM M0T45071ZT M2T13081 M3T40371
PEUGEOT	558098 5802-CR 5802-Q7 5802-Q8 5802-Q9 5802-R3 580200000000 5802A0 5802C2 5802C9 5802CC 5802CG 5802EP 5802J1 5802J5 5802M9 5802N0 5802N2 5802N3 5802P8 5802Q1 5802R4 5802Y3 9150866480 91536241 9153624180 91536242 95155198 95624960 95667752 95667753

	96028857 96052193 9605219380 96087192 9608719380 96093132 9609313280 96095132 9618725080 96262614 9633292480 9647982880 9648644680 9658308780 97530824
POWERMAX	88213335
PRESTOLITE	20500737 S1208V
REAL	20479541BN 20479541OE 20479541RC
RNL	RNLD7E16
ROLLCO	STM476
SANDO	6015102.1 6015145.0 6015145.1 6015145.2
SIDAT	S12VA0002A2
SIOM	MAV371390 MAV4720 MAV4740
STARDAX	STX200012 STX200012R STX200041 STX200041R STX200101 STX200101R STX200111 STX200111R STX200317 STX200317R STX201404
VALEO	438093 455962 726053 D6G3 D6RA100 D6RA37 D6RA57 D6RA571 D6RA572 D7E16 D7E2 D7E23 D7E7 TS8E2 TS8E2M
WAI	220.008.093.000 220.008.093.005 220.008.093.215 220.008.093.315

220.008.093.395 220.008.093.506
220.008.093.509 220.008.093.608
220.008.093.609 30738R S131.728
S148.755

WOODAUTO	STR54001

Aplicaciones

CITROËN

XSARA PICASSO (N68)

1.6 16V 06/2005-09/2006 1.6 16V 09/2005-12/2011

1.6 16V LPG 06/2004-12/2010 1.6 12/1999-12/2010 1.6 12/1999-09/2001

1.6 06/2002-08/2005 1.6 Chrono 04/2001-10/2004

C3 II (SC_)

1.1 i 09/2009-01/2013 1.1 i 09/2009-01/2013 1.4 11/2009-09/2016

1.4 11/2009-09/2016 1.4 11/2009-09/2016 1.4 LPG 07/2010-09/2016

BERLINGO / BERLINGO FIRST Box Body/MPV (M_)

1.4 i (MBKFX, MBKFW) 07/1996-12/2011

1.4 i (MBKFX, MBKFW) 07/1996-12/2011

1.1 i (MAHDZ, MBHDZ, MBHFX) 07/1996-03/2008

1.4 i (MBKFX, MBKFW) 07/1996-12/2011

1.1 i (MAHDZ, MBHDZ, MBHFX) 07/1996-03/2008

1.6 16V (MBNFU) 10/2000-03/2008 1.4 i bivalent (MBKFW) 04/2003-10/2005

1.4 bivalent 11/2002-12/2011 1.6 16V 08/2005-12/2007

1.4 i 08/1999-05/2008 1.4 i 08/1999-05/2008

1.4 BiFuel (MBKFXB, MCKFXB) 07/1996-10/2002

AX (ZA-_)

14 (ZA) 04/1987-04/1997 14 (ZA) 04/1987-04/1997

1.3 Sport (ZAM4A) 04/1987-12/1988 14 01/1988-12/1992

10 07/1986-12/1998 14 4x4 08/1991-12/1996 11 09/1986-12/1997

14 4x4 08/1991-12/1996 14 (ZA) 04/1987-04/1997 14 4x4 08/1991-12/1996

10 E 12/1986-12/1988 11 09/1986-12/1997 14 06/1988-12/1989

14 12/1986-12/1988 11 12/1986-04/1994 14 4x4 08/1991-12/1996

14 01/1988-12/1992 11 12/1986-04/1994 14 (ZA) 04/1987-04/1997

10 02/1987-12/1998 11 Cat (ZA_) 09/1988-12/1989

1.4 GTi 08/1991-12/1996 1.4 GTi 06/1991-12/1996

1.4 GTi 06/1991-12/1992 11 4x4 06/1991-07/1992 10 09/1986-06/1992

1.4 Allure 08/1992-04/1994 1.4 4x4 08/1992-04/1994

14 GT 01/1989-12/1991 14 01/1989-12/1991

BX (XB-_)

14 E 04/1983-02/1993 14 E 09/1985-02/1993 14 E 10/1982-06/1988

14 E 04/1983-07/1989 14 01/1989-02/1993 14 E 04/1983-07/1989

14 01/1989-02/1993 14 E 10/1985-05/1989 14 01/1989-12/1989

11 10/1988-06/1992 14 10/1982-01/1992 14 10/1982-01/1992

14 10/1982-01/1992

BERLINGO / BERLINGO FIRST MPV (MF_, GJK_, GFK_)

1.4 i (MFKFX, MFKFW, GJKFWB, GJKFWC, GFKFWC) 07/1996-12/2011

1.1 i (MFHDZ, MFHFX) 07/1996-05/2008

1.4 i (MFKFX, MFKFW, GJKFWB, GJKFWC, GFKFWC) 07/1996-12/2011

1.1 i (MFHDZ, MFHFX) 07/1996-05/2008

1.4 i (MFKFX, MFKFW, GJKFWB, GJKFWC, GFKFWC) 07/1996-12/2011

1.6 16V (MFNFU) 10/2000-12/2011 1.4 i bivalent (MFKFW) 04/2003-10/2008

1.4 bivalent 11/2002-12/2011 1.6 16V (MFNFU) 11/2002-10/2008

1.4 11/2002-10/2005

C15 Box Body/MPV (VD_)

1.4 i 05/1991-12/1996 1.1 i 07/1988-12/1996 1.4 i 05/1991-12/1996

1.4 07/1987-12/1996 1.4 E 05/1987-12/1996 1.4 E 07/1987-12/1996

1.0 10/1984-12/1997 1.0 10/1984-12/1997 1.0 10/1984-12/1997

1.1 11/1988-07/1996

SAXO (S0, S1)

1.0 X 05/1996-11/1998 1.1 X, SX 05/1996-09/2003 1.4 VTS 05/1996-06/2003

1.6 VTL, VTR 05/1996-06/2003 1.6 VTS 06/1996-09/2003

1.4 VTS 05/1996-06/2003 1.1 X, SX 05/1996-09/2003 1.0 X 05/1998-06/2003

1.6 VTS 09/2000-09/2003 1.6 02/2001-04/2004 1.6 02/1996-06/2003

1.6 02/1996-04/2004 1.1 BiFuel 07/2000-06/2003

ZX Break (N2)

1.6 i 10/1993-10/1997 1.4 i 10/1993-10/1997 1.4 i 10/1993-10/1997

1.6 i 10/1993-10/1997 1.4 i 10/1993-10/1997

ZX (N2)

1.6 i 03/1991-06/1997 1.6 i 03/1991-06/1997 1.4 i 03/1991-06/1997

1.4 i 03/1991-06/1997 1.4 i 03/1991-06/1997 1.1 03/1991-06/1997

1.4 03/1991-06/1997 1.1 03/1991-08/1993 1.1 03/1991-08/1993

XSARA Break (N2)

1.4 i 10/1997-08/2005 1.6 i 10/1997-09/2000 1.4 i 10/1997-08/2005

1.6 16V 09/2000-08/2005 1.4 LPG 05/1998-08/2000

1.4 LPG 05/1998-08/2000

C3 I (FC_, FN_)

1.6 16V 05/2003-09/2005 1.6 16V 02/2002-08/2010 1.1 i 02/2002-12/2009

1.1 i 02/2002-12/2009 1.4 i Bivalent 02/2002-12/2009

1.4 16V 12/2003-08/2010 1.4 i 02/2002-11/2010 1.4 i 02/2002-11/2010

1.1 LPG 06/2006-12/2009 1.4 BiFuel 09/2008-12/2009

XSARA (N1)

1.6 i 04/1997-09/2000 1.4 i 04/1997-03/2005 1.4 i 04/1997-03/2005

1.6 16V 09/2000-03/2005 1.4 LPG 05/1998-08/2000

BX Break (XB-_)

14 01/1989-02/1993 14 01/1986-02/1993 14 01/1989-12/1989

1.4 01/1987-01/1992 1.4 01/1987-01/1992 1.4 01/1987-01/1992

XSARA Coupe (N0)

1.4 i 03/1998-03/2005 1.4 i 03/1998-03/2005 1.6 16V 09/2000-03/2005

1.6 i 02/1998-09/2000

C2 (JM_)

1.4 09/2003-12/2009 1.6 VTS 10/2004-12/2009 1.1 09/2003-09/2012

1.4 09/2003-12/2009 1.6 07/2003-10/2010 1.1 09/2003-09/2012

1.4 16V 04/2005-12/2009 1.4 10/2006-12/2009

C3 Pluriel (HB_)

1.4 05/2003 1.6 05/2003 1.4 05/2003 1.4 07/2003

C4 Coupe (LA_)

1.4 16V 11/2004-07/2011 1.6 16V 11/2004-07/2011

C4 I (LC_)

1.6 16V 11/2004-07/2011 1.4 16V 11/2004-07/2011

1.6 16V Bio-Flex 09/2007-07/2008 1.6 THP 150 07/2008-07/2011

BERLINGO MULTISPACE (B9)

1.6 04/2008 1.6 04/2008

C15 Estate

1.1 08/1988-07/1996 1.4 05/1991-07/1996 1.4 05/1987-09/1992

1.1 10/1988-10/1992 1.4 05/1987-10/1992

NEMO Box Body/MPV (AA_)

1.4 02/2008 1.4 02/2008

BERLINGO Box Body/MPV (B9)

1.6 04/2008 1.6 04/2008

C-ELYSEE (DD_)

1.6 VTi 115 (DDNFP0, DDNFP6, DDNFP9) 11/2012

NEMO MPV

1.4 04/2009 1.4 04/2009

C4 I Saloon

1.6 16V 07/2006-07/2011

SAXO Hatchback van (S3_)

1.0 10/1997-06/2003 1.0 08/1999-06/2003

C2 ENTERPRISE (JG_)

1.1 11/2003-12/2009 1.1 11/2003-12/2009

ZX Hatchback Van (N2)

1.4 07/1994-12/1995

XSARA Estate Van

1.4 09/2000-03/2005

XSARA Hatchback Van (N3_)

1.4 05/1998-10/2004 1.4 LPG 06/1999-08/2000

BX Van (XB-_)

1.4 09/1982-01/1992

PEUGEOT

308 I (4A_, 4C_)

1.6 BioFlex 04/2008-10/2014 1.6 16V 09/2007-10/2014

1.6 16V 09/2007-10/2014 1.6 16V 09/2007-10/2014

405 II Break (4E)

1.6 08/1992-10/1996 1.4 08/1992-10/1996 1.4 07/1993-06/1994

207 (WA_, WC_)

1.4 BiFuel 08/2007-12/2013 1.4 08/2008-12/2015 1.4 08/2008-12/2015

1.4 16V 02/2006-10/2013 1.6 16V 02/2006-10/2013 1.4 04/2006-10/2013

1.4 04/2006-10/2013 1.4 04/2006-10/2013

106 II (1A_, 1C_)

1.6 S16 05/1996-07/2004
1.6 i 05/1996-01/2001
1.4 i 05/1996-07/2004
1.4 i 05/1996-07/2004
1.0 i 05/1996-10/1999
1.6 i 05/1996-10/1999
1.4 i 05/1996-07/2004
1.1 i 05/1996-07/2004
1.6 i 05/1996-01/2001
1.1 i 05/1996-07/2004
1.0 i 04/1996-03/2001
1.1 i 01/1997-03/2001

106 I (1A, 1C)

1.0 09/1991-04/1996
1.6 11/1994-04/1996
1.3 10/1993-04/1996
1.4 09/1991-04/1996
1.4 Le Mans 09/1991-11/1994
1.0 09/1991-04/1996
1.4 09/1991-04/1996
1.6 06/1993-04/1996
1.1 09/1991-04/1996
1.0 09/1991-04/1996
1.4 08/1991-03/1996
1.4 08/1991-03/1996

205 I (741A/C)

1.4 02/1983-10/1987
1.4 02/1983-10/1987

306 Hatchback (7A, 7C, N3, N5)

1.4 04/1993-07/2001
1.4 04/1993-07/2001
1.6 05/1993-10/2000
1.1 05/1993-05/2001
1.4 04/1993-07/2001
1.6 10/2000-05/2001

309 I (10C, 10A)

1.4 03/1989-07/1989
1.4 03/1989-07/1989
1.4 03/1989-07/1989
1.4 08/1988-08/1989

205 I Convertible (741B, 20D)

1.4 CJ 05/1991-12/1994
1.4 CT 04/1986-12/1988
1.1 CJ 10/1989-12/1994
1.4 CJ 05/1991-12/1994
1.4 CT 04/1986-12/1988
1.4 CJ 03/1989-12/1994
1.4 CJ Cat 01/1989-09/1993
1.1 08/1987-12/1994
1.4 08/1987-07/1990

205 II (20A/C)

1.1 07/1989-09/1998
1.0 10/1987-09/1998
1.4 Cat 08/1987-09/1993
1.4 07/1988-09/1998
1.4 07/1988-05/1989
1.4 07/1988-05/1989
1.4 10/1987-10/1990
1.1 10/1987-07/1992
1.4 07/1988-09/1998
1.4 07/1988-09/1998
1.4 06/1987-12/1989
1.3 Rallye 10/1987-10/1990
1.4 07/1988-09/1998
1.4 07/1988-09/1998
1.4 08/1990-07/1992
1.0 08/1992-05/1997

309 II (3C, 3A)

1.4 07/1989-12/1993
1.1 08/1990-12/1993
1.4 07/1989-12/1993
1.4 07/1990-12/1993
1.1 09/1989-10/1993

306 (7B, N3, N5)

1.4 SL 06/1994-05/2001
1.4 SL 06/1994-05/2001
1.1 06/1994-05/2001
1.6 SR 06/1994-10/2000
1.4 SL 06/1994-05/2001
1.6 10/2000-05/2001

306 Convertible (7D, N3, N5)

1.6 04/1996-10/2000
1.6 10/2000-04/2002

405 II (4B)

1.4 08/1992-10/1995
1.4 08/1992-06/1994

306 Break (7E, N3, N5)

1.4 03/1997-04/2002
1.6 03/1997-10/2000
1.4 03/1997-04/2002
1.6 10/2000-04/2002

206 Hatchback (2A/C)

1.4 LPG 05/2006-09/2007
1.4 i 09/1998-12/2012
1.4 i 09/1998-12/2012
1.6 i 09/1998-12/2000
1.1 i 09/1998-02/2007
1.1 i 09/1998-02/2007

1.4 i 09/1998-12/2012 1.6 16V 07/2000-04/2009 1.4 16V 10/2003-02/2008

1.1 08/1998-07/2000 1.6 16V 06/2001-04/2009 1.6 8V 05/1999-10/2003

1.6 BiFuel 07/2000-04/2009

PARTNER Box Body/MPV (5_, G_)

1.4 06/1996-12/2015 1.4 06/1996-12/2015 1.4 06/1996-12/2015

1.1 06/1996-09/2005 1.4 CNG 04/2003-10/2006 1.6 09/2000-10/2002

1.4 10/2005-12/2010 1.4 BiFuel 04/2003-10/2006

PARTNER MPV (5_, G_)

1.4 06/1996-12/2015 1.4 06/1996-12/2015 1.4 06/1996-12/2015

1.1 06/1996-10/2002 1.1 06/1996-10/2002 1.6 16V 07/2001-03/2008

1.4 11/2002-10/2006

206+ (2L_, 2M_)

1.4 i 09/2010-06/2013 1.4 i (2LKFWA, 2MKFWA) 01/2009-08/2013

1.1 01/2009-06/2013

206 SW (2E/K)

1.4 07/2002-02/2007 1.6 16V 07/2002 1.4 07/2002-02/2007

1.1 07/2002-02/2007 1.4 16V 10/2003 1.4 LPG 07/2002-02/2007

307 (3A/C)

1.4 08/2000-09/2003 1.6 07/2006-04/2012 1.6 16V 08/2000-11/2007

1.4 16V 11/2003-07/2007

106 Van II Hatchback Van (1S_)

1.0 04/1996-03/2001 1.0 04/1996-03/2001

307 SW (3H)

1.6 16V 03/2002-04/2008 1.4 16V 11/2003-07/2007 1.4 04/2002-09/2003

206 CC (2D)

1.6 16V (2DNFUF, 2DNFUR) 09/2000-12/2007 1.6 09/2001-12/2008

405 I (15B)

1.4 01/1987-07/1992 1.4 06/1987-07/1992

1007 (KM_)

1.4 04/2005 1.4 04/2005 1.6 16V 04/2005 1.4 16V 10/2005

307 CC (3B)

1.6 16V 03/2003-04/2009

307 Break (3E)

1.4 16V 11/2003-07/2007 1.6 16V 03/2002-04/2008 1.4 04/2002-09/2003

PARTNER Box Body/MPV

1.6 04/2008 1.6 04/2008

405 I Break (15E)

1.4 05/1988-07/1992

BIPPER (AA_)

1.4 02/2008 1.4 02/2008

206 Saloon

1.4 03/2007 1.6 16V 03/2007 1.4 03/2007

207 SW (WK_)

1.4 06/2007-12/2012 1.4 06/2007-12/2012 1.4 LPG 08/2007-12/2012

1.6 16V 06/2007-10/2013 1.6 16V 06/2007-10/2013

1.6 16V 06/2007-10/2013

205 Hatchback Van

1.1 08/1987-07/1990 1.4 02/1983-07/1987 1.1 08/1990-05/1997

1.0 08/1990-04/1995

PARTNER TEPEE

1.6 VTi 04/2008 1.6 VTi 04/2008

BIPPER TEPEE

1.4 04/2008 1.4 04/2008

301

1.6 VTi 115 11/2012-10/2017

306 Estate Van (N_, 7_)

1.4 03/1996-07/2001

309 Hatchback Van (10S, 3S)

1.1 09/1989-10/1993 1.4 09/1989-10/1993 1.4 09/1989-10/1993

306 Hatchback Van

1.4 03/1996-07/2001 1.1 07/1993-12/1994

PARTNER Platform/Chassis (5_, G_)

1.6 09/2000-05/2008

206 Van

1.1 09/2002-02/2007

106 Van I Hatchback Van (1S_)

1.0 08/1991-03/1996 1.0 08/1991-03/1996

PARTNER ORIGIN Box Body/MPV (G_)

1.4 08/2008-12/2015 1.6 09/2011-12/2015

308 SW I (4E_, 4H_)

1.6 16V 09/2007-10/2014 1.6 16V 09/2007-10/2014

308 CC (4B_)

1.6 16V 06/2009-12/2014 1.6 16V 06/2009-12/2014

PARTNER ORIGIN MPV (G_)

1.4 07/2008-12/2013