SINTLY

SINTLY | STARTER MOTOR **XTLSTR4009**

VOLTAGE **12** V

POWER **0.90** kW

APPLICATIONS HYUNDAI, KIA, MITSUBISHI, PROTON

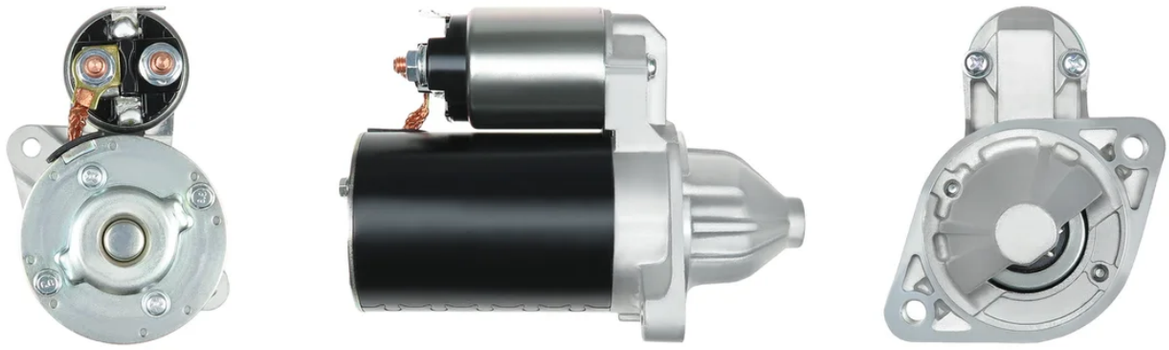

DIMENSIONS

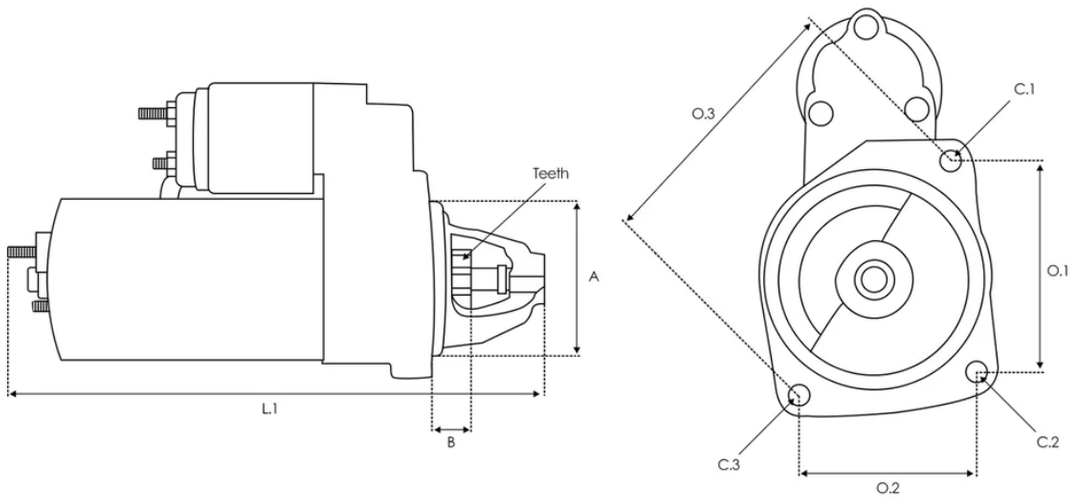

A **77.00 mm** B **18.50 mm** Teeth **8 qty.** L.1 **190.50 mm** O.1 **105.00 mm** C.1 **M10x1.25 mm** C.2 **M10x1.25 mm**

Números OE

VALEO	1250955

Código equivalente

A.Z. MEISTERTEILE	AZMT-53-010-1179
ACAUTO	AC-JBS1311

AINDE	CGB-22805
AIRSTAL	30-0134
ALANKO	10439684
ANDEL	ANM15091X
APEC	ASM1487
AS-PL	S3111S UD01226S UD20850S
ASAM AUTOMOTIVE	121836
ATL AUTOTECHNIK	A22590
BORG & BECK	BST2310
BOSCH	0986017961 0986022591 0986438097 9000692018
BTS TURBO	S106139 S106383
CARGO	113659 F032113659
CARWOOD GROUP	BREF032113659
CASCO	CST32113GS
DELCO	8000174 8000395

EAI	11467
ELECTROLOG	STR0050 STR2041
ELSTOCK	25-0298
ELTA AUTOMOTIVE	EZ0564
ERA	220615A
EUROTEC	11040743
FARCOM	105443
GHIBAUDI	SG0456 SG0456RB
HELLA	8EA012527-511
HENKEL PARTS	3111783
HERTH+BUSS	J5210509
HOFFER	H5015015
HYUNDAI / KIA	36100-11100 36100-11110 36100-11120 36100-22800 36100-22805 36100-22810 36100-22900 36100-26800 36100-26810
IAP QUALITY PARTS	803-07050
ITAB AUTOMOTIVE	10032113OV

KRAUF	STA1311
LE PART	LES0625
LOGISTIK	335199
LUCAS	LRS00473 LRS00515 LRS00516 LRS473 LRS515 LRS516
MAGNETI MARELLI	63280901 63280901010 63721311 63721311010 943213111010 944280225910 MSN2605 MSN2620 MSN882 MSR5409 MSRC1311
MANDO	BN3610022805
MAXGEAR	55-0904
MEAT & DORIA	5015015
MITSUBISHI	M002T40081 M002T47281 M002T49881 M003T12572 M003T22581 M003T22582 M003T25781 M003T25782 M003T25783 M003T25785 M003T25881 M003T25882 M003T25883 M003T32581 M003T32582 M003T32583 M003T32584 M003T32585 M003T32588 M003T32589 M003T32591 M003T32592 M003T32593 M003T41081 M003T41083 M003T41088 M003T41282 M003T43481 M2T40081 M2T47281 M2T49881 M3T12572 M3T22582 M3T25781 M3T25782 M3T25785 M3T25881 M3T25882 M3T25883 M3T32581 M3T32582 M3T32583 M3T32584 M3T32585 M3T32589 M3T32591 M3T32592 M3T32593 M3T41081 M3T41083 M3T41282 MD001155 MD001550 MD003551 MD006761 MD016920 MD016921 MD021665

	MD021670 MD021674 MD021678 MD021685 MD027400 MD034120 MD066761 MD081567 MD081568 MD085730 MD100431 MD161437 MD162836 MD162837 MDO21665 MDO27400
MOTRIO	8550505991
NAPA	NPANSM1487 NPANSM1608
NK	4734003
PRESTOLITE	S1120M
REAL	20493311OE
RNL	RNL1311JS
ROLLCO	STM949 STM949RC
SANDO	6032113.1
SIDAT	S12VA0771 S12VA0771A2
SIOM	MAV341130
SNRA	HY9002
STARDAX	STX200127R
STARTCAR	467ST11
TESLA TECHNICS	TT15687 TT15717

TURBO-TEC	TTST001091
VALEO	600084 616490 A250955A TM000A27301 TM000A37201
WAI	10884N 150.001.082.130 150.001.082.131 150.001.082.265 150.001.082.340 150.001.082.360 150.001.082.440 150.001.082.441 16514R 16940N 17827N 17827R S130.141 S145.013
WILMINK GROUP	WG2196655
WILSON	91-31-9014 91-31-9014N
WOODAUTO	STR10009 STR54129 STR71028 STR71173 STR71174 VAL438097 VAL600258 WOOSTR71028 WOOSTR71174

Aplicaciones

HYUNDAI

SONATA II (Y-2)

1.8 06/1989-03/1991 1.8 i 09/1988-10/1993 2.0 i 09/1988-08/1991

2.0 i 16V 01/1991-10/1993 2.0 i 01/1991-10/1993

PONY (X-2)

1.5 10/1989-01/1995 1.5 i 10/1989-01/1995 1.5 i 10/1989-01/1995

1.3 10/1989-01/1995 1.5 10/1989-01/1995

S COUPE (SLC)

1.5 i 04/1992-05/1996 1.5 i 02/1990-05/1996 1.5 i Turbo 04/1991-05/1996

PONY / EXCEL Saloon (X-2)

1.5 i 01/1990-01/1995 1.3 09/1989-08/1994 1.5 01/1990-01/1995

1.5 i 01/1990-01/1995 1.5 01/1990-01/1995 1.3 12/1992-09/1994

1.3 01/1990-01/1995

LANTRA I (J-1)

1.5 i.e. 10/1990-11/1995

PONY (X-1)

1.3 10/1985-09/1989 1.5 (X-1) 10/1985-09/1989

PONY Saloon (X-1)

1.5 10/1985-09/1989 1.3 10/1985-09/1989

MATRIX (FC)

1.5 CRDi 10/2001-08/2010 1.6 06/2001-08/2010

PONY

1.2 06/1974-12/1982

ACCENT III (MC)

1.6 GLS 11/2005-11/2010 1.4 GL 11/2005-11/2010

ACCENT III Saloon (MC)

1.6 GLS 11/2005-11/2010 1.4 GL 11/2005-11/2010

GETZ (TB)

1.4 i 08/2005-12/2010 1.6 06/2005-06/2009 1.6 09/2002-09/2005

1.3 i 09/2002-03/2004 1.3 09/2003-09/2005

ACCENT Saloon (X-3)

1.3 i 12V 10/1994-01/2000
1.5 i 16V 10/1995-01/2000
1.3 10/1994-01/2000
1.5 i 12V 10/1994-01/2000
1.3 10/1994-01/2000
1.3 10/1994-01/2000

ACCENT I (X-3)

1.5 i 16V 12/1995-01/2000
1.3 10/1994-01/2000
1.5 i 12V 10/1994-01/2000
1.3 10/1994-01/2000
1.3 i 12V 10/1994-01/2000
1.3 10/1994-01/2000

ACCENT II (LC)

1.6 12/2002-11/2005
1.3 01/2000-11/2005
1.5 01/2000-11/2005
1.5 09/2000-02/2003
1.3 08/2002-11/2005
1.5 01/2000-10/2002
1.5 09/1999-10/2002

ACCENT II Saloon (LC)

1.6 12/2002-11/2005
1.5 01/2000-12/2006
1.3 01/2000-11/2005
1.5 01/2000-11/2005
1.5 09/1999-10/2002

SONATA III (Y-3)

2.0 i 16V 05/1993-06/1998
2.0 i 06/1994-08/1996
2.0 i 16V 06/1996-06/1998
1.8 i 05/1993-06/1998
1.8 GLS 07/1996-05/1998

LANTRA II (J-2)

1.5 12V 12/1996-09/2000

LANTRA II Estate (J-2)

1.5 12V 04/1997-10/2000

ELANTRA III (XD)

1.6 06/2000-07/2006
1.6 05/2003-07/2006
1.6 06/2000-07/2006

SANTAMO

2.0 16V 4x4 05/1999-12/2002 2.0 16V 05/1999-12/2002

2.0 10/1998-10/2002

ELANTRA III Saloon (XD)

1.6 06/2000-07/2006 1.6 05/2003-05/2006 1.6 06/2000-07/2006

SANTA FÉ I (SM)

2.0 08/2001-03/2006

COUPE II (GK)

1.6 16V 03/2002-08/2009

MITSUBISHI

L 300 / DELICA II Bus (L03_P/G, L0_2P)

1.6 (L032P, L062P) 11/1984-02/1987 1.6 (L032P, L062P) 09/1981-10/1986

2.0 4WD (L037G) 11/1986-02/1987 1.8 4WD (L035G) 08/1984-02/1987

COLT II (C1_A)

1.2 EL, GL (C15A) 02/1984-09/1986 1.5 GLX (C12A) 09/1985-04/1988

1.5 GLX (C12A) 09/1984-04/1988 1.6 Turbo ECi (C13A) 02/1984-04/1988

1.2 EL, GL (C15A) 09/1986-04/1988 1.6 Turbo ECi (C13A) 07/1986-04/1988

1.3 EL,GL (C11A) 06/1986-04/1988

LANCER III (C1_A, C6_A)

1.2 (C65A) 08/1986-04/1988 1.5 GLX (C12AS) 11/1983-04/1988

1.2 GL (C15AS) 01/1984-10/1986

LANCER III Station Wagon (C1_V, C3_V)

1.8 4WD (C37V) 08/1990-06/1992 1.5 (C12V) 09/1988-12/1990

1.8 4WD (C37V) 01/1987-12/1987

1.5 (C12V) 09/1985-12/1987

1.5 12V (C12V) 09/1990-12/1991

1.8 4WD (C37V) 01/1987-08/1989

1.8 4WD (C37V) 03/1989-12/1990

SPACE WAGON (N3_W, N4_W)

1.8 4WD (N41W) 10/1991-10/1998

1.8 (N31W) 10/1991-10/1998

2.0 (N33W) 10/1992-10/1998

2.0 4WD (N43W) 10/1992-10/1998

LANCER IV Hatchback (C6_A, C7_A)

1.6 16V (C76A, C66A) 06/1992-05/1994

1.5 12V (C62A) 05/1989-05/1992

1.3 12V (C61A) 06/1992-05/1994

1.5 (C62A) 06/1988-05/1992

1.8 GTi 16V (C68A) 11/1989-05/1992

1.8 GTi 16V (C69A) 06/1992-12/1993

1.8 4WD (C77A) 09/1989-06/1992

COLT IV (CA_A)

1.3 GLi 12V (CA1A) 04/1992-04/1996

CORDIA (A21_A, AB, AC)

1.8 GSL (A215A) 10/1986-07/1989

1.8 Turbo ECi (A213A) 10/1984-07/1989

COLT III (C5_A)

1.3 GL (C61A) 04/1988-12/1990

1.5 GLXi (C52A) 04/1988-05/1992

1.3 12V (C51A) 04/1988-05/1992

1.3 (C51A) 04/1988-05/1992

1.5 Cat (C52A) 07/1990-05/1992

1.6 GTi 16V (C53A) 04/1988-05/1990

SAPPORO II (A16_A)

1.6 GLX (A161A) 08/1980-09/1984

LANCER F (A15_)

1.2 GLX (A171) 03/1983-01/1984

GALANT V (E1_A)

1.6 GLX (E11A) 06/1984-04/1990

2.0 Turbo ECi (E15A) 06/1984-04/1990

2.0 GLS (E15A) 06/1984-04/1990

2.0 GLS (E15A) 06/1986-04/1990

LANCER IV (C6_A, C7_A)

1.5 (C62A) 04/1988-05/1992

1.3 (C61A) 08/1988-05/1992

1.3 12V (C61A) 07/1990-06/1992

1.3 (C61A) 08/1988-05/1992

1.3 (C61A) 04/1988-05/1992

1.5 12V (C62A) 06/1990-05/1992

TREDIA (A21_)

1.4 GLX (A211) 10/1982-08/1985

1.8 GLS (A215) 08/1984-07/1986

L 300 III Van (P0_V, P1_V, P2_V)

1.6 (P12V, P02V) 11/1986-05/1994

2.0 (P03V, P13V) 11/1986-05/1996

2.4 (P24V, P24W) 11/1986-08/1997

2.4 (P24V, P24W) 11/1986-08/1997

LANCER II (A17_)

1.4 GLX (A172) 09/1979-02/1983

1.2 (A171) 01/1980-12/1981

1.6 (A174) 09/1979-02/1983

GALANT IV (A16_)

1.6 GLX (A161A) 09/1980-05/1984

2.0 GLS (A163) 09/1980-05/1984

L 300 / DELICA II Van (L03_P)

1.6 (L032P, L062P) 05/1980-10/1986

L 300 III Bus (P0_W, P1_W, P2_W, P3_W)

1.6 (P02W, P12W) 11/1986-05/2004

2.0 (P03W, P13W) 11/1986-05/2004

2.4 4WD (P24W) 08/1986-05/2004

2.4 4WD (P24W) 11/1986-12/1990

2.0 (P03W, P13W) 11/1986-05/2004

2.0 4WD (P23W, P03W, P13W) 12/1986-05/2004

2.4 (P04W, P14W) 11/1990-05/2004

2.0 i (P00W, P03W, P13W) 06/1994-10/1998

COLT I (A15_A)

1.2 GL (A151A) 12/1978-01/1984

1.4 GLX, GT (A152A) 05/1979-01/1984

1.4 GLX,GT (A152, A156) 01/1981-10/1982

LANCER V (CB_A, CD_A, CE_A)

1.3 (CB1A) 06/1992-12/1996

1.3 (CB1A) 06/1992-02/1995

LANCER CELESTE Coupe (A7_)

1.6 ST (A73A) 01/1977-06/1981

GALANT VI Saloon (E3_A)

1.8 (E32A) 11/1987-08/1990

1.6 (E31A) 01/1988-10/1992

1.8 (E32A) 11/1987-10/1992

2.0 GTI 16V Cat 4WD (E38A, E39A, E33A) 09/1991-10/1992

2.0 GTi 16V (E39A, E38A, E33A) 11/1987-10/1992

2.0 4WD (E39A, E38A, E33A) 12/1988-10/1992

2.0 GTi 16V 4WD (E39A, E38A, E33A) 06/1988-10/1992

2.0 GTi 16V (E39A, E38A, E33A) 11/1988-10/1992

SAPPORO I (A12_)

1.6 SL, GL (A121) 04/1978-07/1980

L 300 III Platform/Chassis (P1_T)

2.0 (P13T) 07/1994-04/2000

L 300 / DELICA II Platform/Chassis (L03_P)

1.6 (L032P, L062P, L036P) 04/1983-04/1994

PAJERO II Canvas Top (V2_C, V4_C)

2.4 (V21C) 04/1991-04/2000

PAJERO II (V3_W, V2_W, V4_W, V5_W)

2.4 (V21W) 04/1991-10/1999

ECLIPSE I (D2_A)

1.8 (D21A) 12/1989-03/1994

GALANT VI (E3_A)

1.8 11/1988-10/1992

1.8 (E32A) 11/1988-10/1992

2.0 (E39A, E38A, E33A) 04/1989-10/1992

2.0 GTI 16V (E39A, E38A, E33A) 11/1988-10/1992

2.0 4WD (E33A, E38A, E39A) 04/1989-10/1992

DELICA / SPACE GEAR

2.0 (PA3V) 09/1995-10/2002

L200 (K3_T, K2_T, K1_T, K0_T)

2.4 09/1989-10/1996

2.0 4WD 02/1987-05/1994

GALANT VII Saloon (E5_A, E7_A, E8_A)

2.0 GLSI 4WD (E75A) 11/1992-08/1996

2.0 GLSTD (E57A) 11/1992-08/1996

SPACE WAGON (D0_V/W)

2.0 GLX 4WD (D08W) 06/1986-05/1988

1.8 GLX (D05V, D05W) 01/1984-12/1988

2.0 GLXi 4WD (D08W) 06/1988-04/1991

2.0 4WD (D08W) 03/1985-04/1991

2.0 GLXi (D04W) 06/1988-04/1991

2.0 GLX (D04W) 06/1986-05/1988

1.8 4WD (D05V, D05W) 10/1987-08/1988

GALANT VII (E5_A, E7_A, E8_A)

2.0 GLSI 4WD (E75A) 11/1992-08/1996

LANCER VI (CJ_, CP_)

1.3 12V (CK1A) 12/1995-08/2003

PAJERO I Canvas Top (L04_G)

2.6 (L042G, L047G) 01/1983-11/1990

2.6 (L042G, L047G) 01/1983-11/1990

L400 Bus (PD_W, PC_W, PA_V, PB_V, PA_W)

2.0 16V (PA3V/W, PB3V, PA3W) 05/1995-05/2000

2.0 (PA3W) 09/1995-10/2002

STARION (A18_A)

2.0 Turbo ECi (A183A) 06/1982-12/1985

GALANT IV Station Wagon (A16_V)

2.0 GLX (A163V) 09/1980-06/1983

GALANT III (A12_)

2.0 (A123) 01/1979-08/1980

L200 (K7_T, K6_T, K5_T)

2.0 (K62T) 06/1996-12/2007

SANTAMO (UG)

2.0 16V 05/1999-12/2004

2.0 16V 4WD 05/1999-12/2004

L400 Van (PD_W, PC_W, PB_V, PA_W, PA_V)

2.0 06/1996-03/2001

PROTON

PERSONA 400 Hatchback (C9_C, C9_S)

413 GLSi 01/1994-01/2000 415 GLi/GLSi 01/1994-07/2000

PERSONA 400 (C9_S)

413 01/1994-06/2003 415 GLi/GLSi 01/1994-07/2000

WIRA Hatchback (C9_L)

1.3 08/2000-06/2007 1.5 08/2000-06/2007 1.3 08/2000-06/2007

SATRIA (C9_M)

1.5 (C97M) 07/2000-05/2006

WIRA

1.5 08/2000

PERSONA 300 (C9_M)

315 GLSi 09/1996-07/2000 313i 03/1996-01/2000

315 GLi/GLSi 03/1996-07/2000

KIA

RIO II Saloon (JB)

1.4 16V 03/2005-12/2011 1.6 16V 03/2005-12/2011

RIO II (JB)

1.4 16V 03/2005-12/2011 1.6 CVVT 03/2005-12/2011 1.4 01/2010-12/2011

CERATO I Saloon (LD)

1.6 04/2004-12/2009 1.6 04/2004-12/2009

CERATO I Hatchback (LD)

1.6 07/2004-01/2007

JOICE (MTE1P)

2.0 02/2000-09/2003

2.0 09/2001-09/2003