SINTLY

SINTLY | STARTER MOTOR **XTLSTR4024**

VOLTAGE **12** V

POWER **1.00** kW

APPLICATIONS CITROËN, PEUGEOT

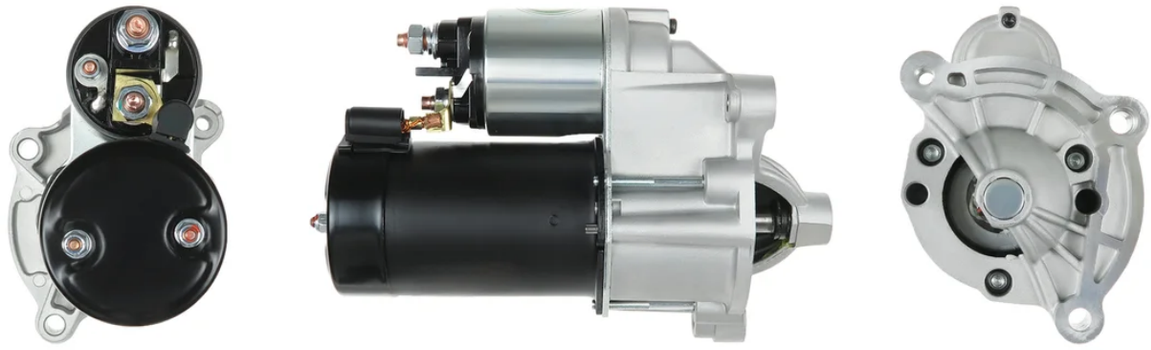

DIMENSIONS

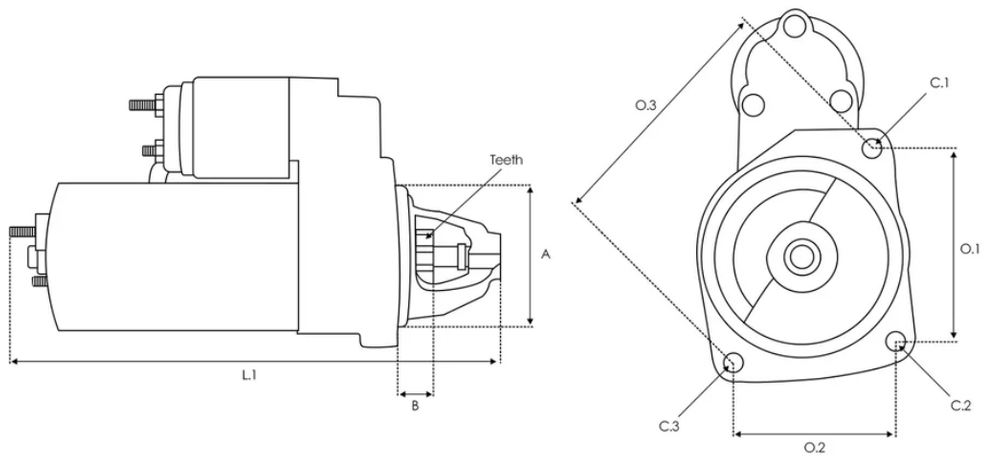

B -5.00 mm Teeth 9 qty. L.1 213.00 mm O.1 85.00 mm O.2 120.00 mm O.3 85.00 mm C.1 9.00 mm C.2 9.00 mm C.3 M8x1.25 mm

Números OE

Other	438086

Código equivalente

3EFFE	PRSL086 STRL086
AINDE	AI-80001

ANDEL	ANM15328X
APEC	ASM1588
AS-PL	S3010 UD14983S
AUTOELECTRO	AES7137 NES7137
BOSCH	0001112019 0001112029 0986013850 F000AL0327
BOVEZ	STA0011R
CARGO	110584 116306 F032110584 F032116306
CASCO	CST15106AS CST15106ES CST15106GS CST15106OS CST15106RS
CEVAM	3106
DAF	1516758R
DELCO	DRS3108 DRS3545 DRS3545N DRS3689 DS4218
EAI	11625
ELECTROLOG	STR00259 STR0039 STR0046 STR0060 STR0084 STR79646
ELSTOCK	25-1254 25-3083

ERA	220012 220392
FIAT	71794532 9608719280 9626261480 K9609313280
FORD	3960404
GHIBAUDI	SG0396
HC PARTS	CS390 CS581
HELLA	8EA726205-001
HERTH+BUSS	42432575
IKA	6.0011.9
ISKRA / LETRIKA	11.130.965 11.139.404 AZD3515 AZE1212 AZE1521 IS0529 IS9404
KRAUF	STB0581 STV0581 STV9581
KUHNER	101111 101111V 10390 10390V 10581 10581R 10581V
LUCAS	LRS00737 LRS02106 LRS2106 LRS737
MAGNETI MARELLI	063521120410 063720390010 943251136 943251136010 943253115010 944280138500 MQS390 MRS13850 MSR378
MAHLE	MS182

MEAT & DORIA	5015036
MITSUBISHI	M002T13081 M003T40371 M2T13081 M3T40371
NAPA	NPANSM1588
PEUGEOT	558098 5802-CR 5802-E9 5802-ER 5802-F3 5802-J5 5802-M9 5802-Q3 5802-Q7 5802-Q8 5802-Q9 5802-R3 5802-R5 5802000000000 580298 5802A0 5802C2 5802C9 5802CC 5802CG 5802E8 5802EP 5802J1 5802N0 5802N2 5802N3 5802P8 5802Q1 5802R4 5802Y3 9150866480 91536241 9153624180 91536242 95017849R 95155198 95624960 95656490 95667752 95667753 95667753R 96028857 96052193 9605219380 96087192 96087192R 96087193 9608719380 96093132 9609313280 96095132 9618725080 96262614 9633292480 9647982880 9648644680 9658308780 97530824
POWERMAX	88213335
PRESTOLITE	20500592 20500737 S1090R S1091R S1208V
ROVER	GNU4674 GXE4674
SANDO	6015102.1 6015106.0 6015106.1
SIDAT	S12VA0002A2 S12VA0113A2
SIOM	MAV171450 MAV3090 MAV3470 MAV371390

	MAV4630 MAV4720 MAV4740 MAV4790
STARDAX	STX200012 STX200012R STX200041 STX200041R STX200101 STX200101R STX200111 STX200111R STX200317 STX200317R STX201404
VALEO	432623 436062 438093 455748 455938 455962 726000 726022 726074 726800 726822 D6G3 D6RA100 D6RA37 D6RA57 D6RA571 D6RA572 D7E16 D7E2 D7E23 D7E5 D7E51 D7E7 TS8E2 TS8E2M
WAI	220.008.093 220.008.093.000 220.008.093.215 220.008.093.375 220.008.093.500 220.008.093.506 S131.728 S144.089 S148.755
WOODAUTO	STR54001

Aplicaciones

CITROËN

XSARA PICASSO (N68)

1.6 16V 06/2005-09/2006 | 1.6 16V 09/2005-12/2011

1.6 16V LPG 06/2004-12/2010 | 1.6 12/1999-12/2010 | 1.6 12/1999-09/2001

1.6 06/2002-08/2005 | 1.6 Chrono 04/2001-10/2004

C3 I (FC_, FN_)

1.6 16V 05/2003-09/2005 | 1.6 16V 02/2002-08/2010 | 1.1 i 02/2002-12/2009

1.1 i 02/2002-12/2009 1.4 i Bivalent 02/2002-12/2009

1.4 16V 12/2003-08/2010 1.4 i 02/2002-11/2010 1.4 i 02/2002-11/2010

1.1 LPG 06/2006-12/2009 1.4 BiFuel 09/2008-12/2009

XSARA (N1)

1.6 16V 09/2000-03/2005 1.6 i 04/1997-09/2000 1.4 i 04/1997-03/2005

1.4 i 04/1997-03/2005 1.4 LPG 05/1998-08/2000

BERLINGO / BERLINGO FIRST MPV (MF_, GJK_, GFK_)

1.6 16V (MFNFU) 10/2000-12/2011 1.6 16V (MFNFU) 11/2002-10/2008

1.4 i bivalent (MFKFW) 04/2003-10/2008 1.4 bivalent 11/2002-12/2011

1.4 11/2002-10/2005

1.4 i (MFKFX, MFKFW, GJKFWB, GJKFWC, GFKFWC) 07/1996-12/2011

1.1 i (MFHDZ, MFHFX) 07/1996-05/2008

1.4 i (MFKFX, MFKFW, GJKFWB, GJKFWC, GFKFWC) 07/1996-12/2011

1.1 i (MFHDZ, MFHFX) 07/1996-05/2008

1.4 i (MFKFX, MFKFW, GJKFWB, GJKFWC, GFKFWC) 07/1996-12/2011

XSARA Coupe (N0)

1.6 16V 09/2000-03/2005 1.4 i 03/1998-03/2005 1.4 i 03/1998-03/2005

1.6 i 02/1998-09/2000

XSARA Break (N2)

1.6 16V 09/2000-08/2005 1.4 i 10/1997-08/2005 1.6 i 10/1997-09/2000

1.4 i 10/1997-08/2005 1.4 LPG 05/1998-08/2000 1.4 LPG 05/1998-08/2000

C2 (JM_)

1.4 09/2003-12/2009 1.6 VTS 10/2004-12/2009 1.1 09/2003-09/2012

1.4 09/2003-12/2009 1.6 07/2003-10/2010 1.1 09/2003-09/2012

1.4 16V 04/2005-12/2009 1.4 10/2006-12/2009

C3 Pluriel (HB_)

1.4 05/2003 1.6 05/2003 1.4 05/2003 1.4 07/2003

BERLINGO / BERLINGO FIRST Box Body/MPV (M_)

1.6 16V (MBNFU) 10/2000-03/2008 1.4 i bivalent (MBKFW) 04/2003-10/2005

1.6 16V 08/2005-12/2007 1.4 bivalent 11/2002-12/2011

1.4 i (MBKFX, MBKFW) 07/1996-12/2011

1.4 i (MBKFX, MBKFW) 07/1996-12/2011

1.1 i (MAHDZ, MBHDZ, MBHFX) 07/1996-03/2008

1.4 i (MBKFX, MBKFW) 07/1996-12/2011

1.1 i (MAHDZ, MBHDZ, MBHFX) 07/1996-03/2008 1.4 i 08/1999-05/2008

1.4 i 08/1999-05/2008 1.4 BiFuel (MBKFXB, MCKFXB) 07/1996-10/2002

C4 Coupe (LA_)

1.4 16V 11/2004-07/2011 1.6 16V 11/2004-07/2011

C4 I (LC_)

1.6 16V 11/2004-07/2011 1.4 16V 11/2004-07/2011

1.6 16V Bio-Flex 09/2007-07/2008 1.6 THP 150 07/2008-07/2011

BERLINGO MULTISPACE (B9)

1.6 04/2008 1.6 04/2008

NEMO Box Body/MPV (AA_)

1.4 02/2008 1.4 02/2008

BERLINGO Box Body/MPV (B9)

1.6 04/2008 1.6 04/2008

C3 II (SC_)

1.4 11/2009-09/2016 1.1 i 09/2009-01/2013 1.4 11/2009-09/2016

1.4 11/2009-09/2016 1.1 i 09/2009-01/2013 1.4 LPG 07/2010-09/2016

C-ELYSEE (DD_)

1.6 VTi 115 (DDNFP0, DDNFP6, DDNFP9) 11/2012

NEMO MPV

1.4 04/2009 1.4 04/2009

C4 I Saloon

1.6 16V 07/2006-07/2011

C2 ENTERPRISE (JG_)

1.1 11/2003-12/2009 1.1 11/2003-12/2009

AX (ZA-_)

14 (ZA) 04/1987-04/1997 14 (ZA) 04/1987-04/1997

1.3 Sport (ZAM4A) 04/1987-12/1988 14 01/1988-12/1992

10 07/1986-12/1998 14 4x4 08/1991-12/1996 11 09/1986-12/1997

14 4x4 08/1991-12/1996 14 (ZA) 04/1987-04/1997 14 4x4 08/1991-12/1996

10 E 12/1986-12/1988 11 09/1986-12/1997 14 06/1988-12/1989

14 12/1986-12/1988 11 12/1986-04/1994 14 4x4 08/1991-12/1996

14 01/1988-12/1992 11 12/1986-04/1994 14 (ZA) 04/1987-04/1997

11 Cat (ZA_) 09/1988-12/1989 1.4 GTi 08/1991-12/1996

1.4 GTi 06/1991-12/1996 1.4 GTi 06/1991-12/1992 10 09/1986-06/1992

1.4 Allure 08/1992-04/1994 1.4 4x4 08/1992-04/1994

14 GT 01/1989-12/1991 14 01/1989-12/1991 10 02/1987-12/1998

11 4x4 06/1991-07/1992

C15 Box Body/MPV (VD_)

1.4 i 05/1991-12/1996 1.1 i 07/1988-12/1996 1.4 i 05/1991-12/1996

1.4 07/1987-12/1996 1.4 E 07/1987-12/1996 1.1 11/1988-07/1996

1.4 E 05/1987-12/1996 1.0 10/1984-12/1997 1.0 10/1984-12/1997

1.0 10/1984-12/1997

BX (XB-_)

14 01/1989-02/1993 14 01/1989-02/1993 11 10/1988-06/1992

14 10/1982-01/1992 14 10/1982-01/1992 14 10/1982-01/1992

14 E 04/1983-02/1993 14 E 09/1985-02/1993 14 E 10/1982-06/1988

14 E 04/1983-07/1989 14 E 04/1983-07/1989 14 E 10/1985-05/1989

14 01/1989-12/1989

SAXO (S0, S1)

1.6 VTS 09/2000-09/2003 1.0 X 05/1996-11/1998 1.1 X, SX 05/1996-09/2003

1.4 VTS 05/1996-06/2003 1.6 VTL, VTR 05/1996-06/2003

1.6 VTS 06/1996-09/2003 1.4 VTS 05/1996-06/2003

1.1 X, SX 05/1996-09/2003 1.0 X 05/1998-06/2003 1.6 02/2001-04/2004

1.6 02/1996-06/2003 1.6 02/1996-04/2004 1.1 BiFuel 07/2000-06/2003

BX Break (XB-_)

1.4 01/1987-01/1992 1.4 01/1987-01/1992 1.4 01/1987-01/1992

14 01/1989-02/1993 14 01/1986-02/1993 14 01/1989-12/1989

C15 Estate

1.1 08/1988-07/1996 1.4 05/1991-07/1996 1.4 05/1987-09/1992

1.1 10/1988-10/1992

SAXO Hatchback van (S3_)

1.0 10/1997-06/2003 1.0 08/1999-06/2003

ZX Hatchback Van (N2)

1.4 07/1994-12/1995

XSARA Estate Van

1.4 09/2000-03/2005

BX Van (XB-_)

1.4 09/1982-01/1992

ZX Break (N2)

1.6 i 10/1993-10/1997 1.4 i 10/1993-10/1997 1.4 i 10/1993-10/1997

1.6 i 10/1993-10/1997 1.4 i 10/1993-10/1997

ZX (N2)

1.6 i 03/1991-06/1997 1.6 i 03/1991-06/1997 1.4 i 03/1991-06/1997

1.4 i 03/1991-06/1997 1.4 i 03/1991-06/1997 1.1 03/1991-06/1997

1.4 03/1991-06/1997 1.1 03/1991-08/1993 1.1 03/1991-08/1993

XSARA Hatchback Van (N3_)

1.4 05/1998-10/2004 1.4 LPG 06/1999-08/2000

PEUGEOT

308 I (4A_, 4C_)

1.6 BioFlex 04/2008-10/2014 1.6 16V 09/2007-10/2014

1.6 16V 09/2007-10/2014 1.6 16V 09/2007-10/2014

PARTNER MPV (5_, G_)

1.8 05/1997-12/2002 1.6 16V 07/2001-03/2008 1.4 11/2002-10/2006

1.4 06/1996-12/2015 1.4 06/1996-12/2015 1.4 06/1996-12/2015

1.1 06/1996-10/2002 1.1 06/1996-10/2002

206+ (2L_, 2M_)

1.4 i 09/2010-06/2013 1.4 i (2LKFWA, 2MKFWA) 01/2009-08/2013

1.1 01/2009-06/2013

307 (3A/C)

1.4 08/2000-09/2003 1.6 07/2006-04/2012 2.0 16V 08/2000-06/2005

1.6 16V 08/2000-11/2007 1.4 16V 11/2003-07/2007

307 SW (3H)

1.6 16V 03/2002-04/2008 2.0 16V 03/2002-06/2005

1.4 16V 11/2003-07/2007 1.4 04/2002-09/2003

207 (WA_, WC_)

1.4 08/2008-12/2015 1.4 08/2008-12/2015 1.4 16V 02/2006-10/2013

1.6 16V 02/2006-10/2013 1.4 04/2006-10/2013 1.4 04/2006-10/2013

1.4 04/2006-10/2013 1.4 BiFuel 08/2007-12/2013

206 SW (2E/K)

1.4 16V 10/2003 1.4 07/2002-02/2007 1.6 16V 07/2002

1.4 07/2002-02/2007 1.1 07/2002-02/2007 1.4 LPG 07/2002-02/2007

1007 (KM_)

1.4 04/2005 1.4 04/2005 1.6 16V 04/2005 1.4 16V 10/2005

PARTNER Box Body/MPV (5_, G_)

1.4 CNG 04/2003-10/2006 1.6 09/2000-10/2002 1.8 03/1997-08/2000

1.4 10/2005-12/2010 1.4 BiFuel 04/2003-10/2006 1.4 06/1996-12/2015

1.4 06/1996-12/2015 1.4 06/1996-12/2015 1.1 06/1996-09/2005

307 CC (3B)

1.6 16V 03/2003-04/2009

307 Break (3E)

2.0 03/2002-06/2005 1.4 16V 11/2003-07/2007 1.6 16V 03/2002-04/2008

1.4 04/2002-09/2003

206 Hatchback (2A/C)

1.4 16V 10/2003-02/2008 1.4 LPG 05/2006-09/2007 1.4 i 09/1998-12/2012

1.4 i 09/1998-12/2012 1.6 i 09/1998-12/2000 1.1 i 09/1998-02/2007

1.1 i 09/1998-02/2007 1.4 i 09/1998-12/2012 1.6 16V 07/2000-04/2009

1.1 08/1998-07/2000 1.6 16V 06/2001-04/2009 1.6 8V 05/1999-10/2003

1.6 BiFuel 07/2000-04/2009

PARTNER Box Body/MPV

1.6 04/2008 1.6 04/2008

BIPPER (AA_)

1.4 02/2008 1.4 02/2008

207 SW (WK_)

1.4 06/2007-12/2012 1.4 06/2007-12/2012 1.4 LPG 08/2007-12/2012

PARTNER TEPEE

1.6 VTi 04/2008 1.6 VTi 04/2008

BIPPER TEPEE

1.4 04/2008 1.4 04/2008

301

1.6 VTi 115 11/2012-10/2017

405 II Break (4E)

1.6 08/1992-10/1996 1.4 08/1992-10/1996 1.4 07/1993-06/1994

2.0 08/1992-10/1996

PARTNER Platform/Chassis (5_, G_)

1.6 09/2000-05/2008

PARTNER ORIGIN Box Body/MPV (G_)

1.4 08/2008-12/2015 1.6 09/2011-12/2015

PARTNER ORIGIN MPV (G_)

1.4 07/2008-12/2013

106 II (1A_, 1C_)

1.6 S16 05/1996-07/2004 1.6 i 05/1996-01/2001 1.0 i 05/1996-10/1999

1.6 i 05/1996-10/1999 1.6 i 05/1996-01/2001 1.4 i 05/1996-07/2004

1.4 i 05/1996-07/2004 1.4 i 05/1996-07/2004 1.1 i 05/1996-07/2004

1.1 i 05/1996-07/2004 1.0 i 04/1996-03/2001 1.1 i 01/1997-03/2001

309 I (10C, 10A)

1.4 03/1989-07/1989 1.4 03/1989-07/1989 1.4 03/1989-07/1989

1.4 08/1988-08/1989

205 I Convertible (741B, 20D)

1.4 CJ 05/1991-12/1994 1.1 CJ 10/1989-12/1994 1.4 CJ 05/1991-12/1994

1.4 CJ 03/1989-12/1994 1.4 CJ Cat 01/1989-09/1993 1.1 08/1987-12/1994

1.4 08/1987-07/1990

309 II (3C, 3A)

1.4 07/1989-12/1993 1.1 08/1990-12/1993 1.4 07/1989-12/1993

1.4 07/1990-12/1993 1.1 09/1989-10/1993

205 II (20A/C)

1.4 Cat 08/1987-09/1993 1.4 10/1987-10/1990 1.1 10/1987-07/1992

1.4 06/1987-12/1989 1.4 07/1988-09/1998 1.4 07/1988-09/1998

1.4 07/1988-09/1998 1.4 07/1988-09/1998 1.4 08/1990-07/1992

1.0 08/1992-05/1997 1.1 07/1989-09/1998 1.0 10/1987-09/1998

1.4 07/1988-09/1998 1.3 Rallye 10/1987-10/1990

306 (7B, N3, N5)

1.1 06/1994-05/2001 1.4 SL 06/1994-05/2001 1.4 SL 06/1994-05/2001

1.6 SR 06/1994-10/2000 1.4 SL 06/1994-05/2001 1.6 10/2000-05/2001

405 I (15B)

1.4 01/1987-07/1992 1.4 06/1987-07/1992

405 I Break (15E)

1.4 05/1988-07/1992

205 Hatchback Van

1.1 08/1987-07/1990 1.1 08/1990-05/1997 1.0 08/1990-04/1995

1.4 02/1983-07/1987

405 II (4B)

1.4 08/1992-06/1994 2.0 08/1992-10/1995 1.4 08/1992-10/1995

106 I (1A, 1C)

1.4 08/1991-03/1996 1.0 09/1991-04/1996 1.6 11/1994-04/1996

1.3 10/1993-04/1996 1.4 09/1991-04/1996 1.4 Le Mans 09/1991-11/1994

1.0 09/1991-04/1996 1.4 09/1991-04/1996 1.6 06/1993-04/1996

1.1 09/1991-04/1996 1.0 09/1991-04/1996 1.4 08/1991-03/1996

306 Estate Van (N_, 7_)

1.4 03/1996-07/2001

309 Hatchback Van (10S, 3S)

1.1 09/1989-10/1993 1.4 09/1989-10/1993 1.4 09/1989-10/1993

306 Hatchback Van

1.4 03/1996-07/2001 1.1 07/1993-12/1994

205 I (741A/C)

1.4 02/1983-10/1987 1.4 02/1983-10/1987

306 Hatchback (7A, 7C, N3, N5)

1.4 04/1993-07/2001 1.4 04/1993-07/2001 1.6 05/1993-10/2000

1.1 05/1993-05/2001 1.4 04/1993-07/2001 1.6 10/2000-05/2001

306 Convertible (7D, N3, N5)

1.6 04/1996-10/2000 1.6 10/2000-04/2002

306 Break (7E, N3, N5)

1.4 03/1997-04/2002 1.6 03/1997-10/2000 1.4 03/1997-04/2002

1.6 10/2000-04/2002

106 Van II Hatchback Van (1S_)

1.0 04/1996-03/2001 1.0 04/1996-03/2001

206 CC (2D)

1.6 16V (2DNFUF, 2DNFUR) 09/2000-12/2007 1.6 09/2001-12/2008

308 SW I (4E_, 4H_)

1.6 16V 09/2007-10/2014 1.6 16V 09/2007-10/2014

308 CC (4B_)

1.6 16V 06/2009-12/2014 1.6 16V 06/2009-12/2014

206 Saloon

1.4 03/2007 1.6 16V 03/2007 1.4 03/2007

206 Van

1.1 09/2002-02/2007

106 Van I Hatchback Van (1S_)

1.0 08/1991-03/1996 1.0 08/1991-03/1996