SINTLY

SINTLY | STARTER MOTOR

XTLSTR4041

VOLTAGE 12 V

POWER 1.10 kW

APPLICATIONS FORD, MAZDA, VOLVO

DIMENSIONS

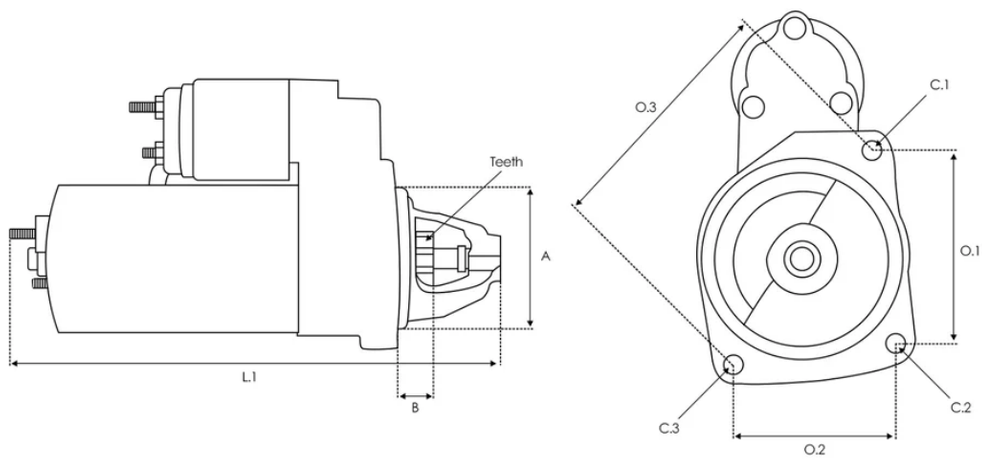

A 76.00 mm B 27.00 mm Teeth 10 qty. L.1 200.00 mm O.1 67.00 mm O.2 104.00 mm O.3 82.00 mm C.1 M10x1.5 mm C.2 M10x1.5 mm C.3 M10x1.5 mm

Números OE

VALEO	193639 201041 438221 458116 458376 460440 726940 TS12E10 TS12E10SV
Other	PRSL125 STRL125 AZMT-53-010-1110 25-2048CT AI-80032 10440688 11440688 003-130007 UD102278S A17060 SFO115 BST2187 BST2225 BST2270 0001107043

0001107087 0001107407 0001107417
0001107499 0001107500 0986017060
1986S00683 111906 F032111906
CST14115GS DSN3001 319086102 11778
STR00070 25-4389 220172 220172A
220420 220420A 1638120780 1648218180
11017060 1011331 1018883 1063999
1088649 1092115 1130187 1140760
1147309 1151215 1237323 1307578
1365665 1416231 1473072 1535268
1535628 1539686 1575034 1671515
1732742 1824489 1896019 2109622
2S6U-11000-CA 7G9N-11000-AB 7G9N-11000-AC
7G9N-11000-AD 8A39-11000-BB 8A39-11000-BF
8V21-11000-BC 8V21-11000-BD 8V21-11000-BE
96FB-11000-KA 96FB-11000-KB 96FB-11000-KC
96FB-11000-KD 98AB-11000-BB 98AB-11000-BC
98AB-11000-BD EV6T-11000-AA
R96FB-11000-CC R96FB-11000-KC
R96FB-11000-KD R96FB-11000-KD1
YS4U-11000-AA YS4U-11000-AB YS4U-11000-AC
YS4U-11000-ADF YS4U-11000-BA
YS4U-11000-BB 8017060 SG0382
8EA011610-021 H5010044 H5014892
10014115OV MT130007 3130007 11010115
STB1050 101050 101050B 101050M
101050V LES0589 331452 LRS02716
LRS2716 063721050010 943210501010
944280170600 1E06-18-400 C601-18-400
C601-18-400A 5010044 5014892 333001
4717120 94212CB 94212CC 88212995
IR8250 590.557.103.000 590.557.103.500
S134.529 S144.746 QRS1906 20450511OE
011-001-000021R STM639 6014115.1
S12BH0022A2 S12VS0022 S12VS0022A2
FO9033 STX200044 STX200044R 778ST11
RE81021N ST01879 193639 201041
438221 458116 458376 460440
726940 TS12E10 TS12E10SV 30667102
31285782 31288275 36001650 36002761
8603377 31167N-BO WG2012800

WG2012801 WG2012974 WG2170222
WG2196573 VALTS12E10 ASM1518
NPANSM1518

Código equivalente

AS-PL	S0096
3EFFE	PRSL125 STRL125
A.Z. MEISTERTEILE	AZMT-53-010-1110
AINDE	25-2048CT AI-80032
ALANKO	10440688 11440688
ASHIKA	003-130007
ATL AUTOTECHNIK	A17060
AUTOTEAM	SFO115
BORG & BECK	BST2187 BST2225 BST2270
BOSCH	0001107043 0001107087 0001107407 0001107417 0001107499 0001107500 0986017060 1986S00683
CARGO	111906 F032111906
CASCO	CST14115GS
DENSO	DSN3001

DRI	319086102
EAI	11778
ELECTROLOG	STR00070
ELSTOCK	25-4389
ERA	220172 220172A 220420 220420A
EUROREPAR	1638120780 1648218180
EUROTEC	11017060
FORD	1011331 1018883 1063999 1088649 1092115 1130187 1140760 1147309 1151215 1237323 1307578 1365665 1416231 1473072 1535268 1535628 1539686 1575034 1671515 1732742 1824489 1896019 2109622 2S6U-11000-CA 7G9N-11000-AB 7G9N-11000-AC 7G9N-11000-AD 8A39-11000-BB 8A39-11000-BF 8V21-11000-BC 8V21-11000-BD 8V21-11000-BE 96FB-11000-KA 96FB-11000-KB 96FB-11000-KC 96FB-11000-KD 98AB-11000-BB 98AB-11000-BC 98AB-11000-BD EV6T-11000-AA R96FB-11000-CC R96FB-11000-KC R96FB-11000-KD R96FB-11000-KD1 YS4U-11000-AA YS4U-11000-AB YS4U-11000-AC YS4U-11000-ADF YS4U-11000-BA YS4U-11000-BB
FRIESEN	8017060
GHIBAUDI	SG0382

HELLA	8EA011610-021
HOFFER	H5010044 H5014892
ITAB AUTOMOTIVE	10014115OV
JAPANPARTS	MT130007
JAPKO	3130007
KRAFTVOLL GER-	11010115
KRAUF	STB1050
KUHNER	101050 101050B 101050M 101050V
LE PART	LES0589
LOGISTIK	331452
LUCAS	LRS02716 LRS2716
MAGNETI MARELLI MANY	063721050010 943210501010 944280170600
MAZDA	1E06-18-400 C601-18-400 C601-18-400A
MEAT & DORIA	5010044 5014892
MEC-DIESEL	333001
NK	4717120

PININFARINA	94212CB 94212CC
POWERMAX	88212995
PROTECH	IR8250
PSH	590.557.103.000 590.557.103.500 S134.529 S144.746
QUINTON HAZELL	QRS1906
REAL	20450511OE
REMANTE	011-001-000021R
ROLLCO	STM639
SANDO	6014115.1
SIDAT	S12BH0022A2 S12VS0022 S12VS0022A2
SNRA	FO9033
STARDAX	STX200044 STX200044R
STARTCAR	778ST11
THE NEW LINE	RE81021N
TMI	ST01879

VOLVO	30667102 31285782 31288275 36001650 36002761 8603377
WAI / TRANSPO	31167N-BO
WILMINK GROUP	WG2012800 WG2012801 WG2012974 WG2170222 WG2196573
WOODAUTO	VALTS12E10
APEC	ASM1518
NAPA	NPANSM1518

Aplicaciones

FORD

FIESTA IV (JA_, JB_)

1.25 i 16V 08/1995-01/2002
1.25 i 16V 08/1995-01/2002
1.25 i 16V 08/1995-01/2002
1.25 i 16V 08/1995-01/2002
1.25 i 16V 08/1995-01/2002
1.25 i 16V 08/1995-01/2002
1.25 i 16V 08/1995-01/2002
1.4 i 16V 04/1996-01/2002
1.4 i 16V 04/1996-01/2002
1.6 16V Sport 02/2000-01/2002
1.6 16V Sport 02/2000-01/2002

GRAND C-MAX (DXA/CB7, DXA/CEU)

1.6 Ti 12/2010-06/2019
1.6 Ti 12/2010-06/2019
1.6 Ti 12/2010-06/2019
1.6 Ti 12/2010-06/2019
1.6 Ti 12/2010-06/2019

C-MAX II (DXA/CB7, DXA/CEU)

1.6 Ti 12/2010-06/2019
1.6 Ti 12/2010-06/2019
1.6 Ti 12/2010-06/2019
1.6 Ti 12/2010-06/2019
1.6 Flexifuel 02/2011-06/2019
1.6 Ti 12/2010-06/2019
1.6 Flexifuel 02/2011-06/2019
1.6 Ti 12/2010-06/2019
1.6 LPG 02/2012-06/2019
1.6 LPG 02/2012-06/2019
1.6 Ti 02/2012-06/2019
1.6 Ti 02/2012-06/2019

PUMA (EC_)

1.7 16V 03/1997-06/2002
1.4 16V 11/1997-10/2000
1.4 16V 11/1997-10/2000
1.7 16V 03/1997-06/2002
1.6 16V 08/2000-06/2002
Racing ST 160 06/1999-06/2002

FOCUS III

1.6 Ti 07/2010-12/2017
1.6 Ti 07/2010-02/2020
1.6 Ti 07/2010-12/2017
1.6 Ti 07/2010-02/2020
1.6 Flexifuel 07/2010-02/2020
1.6 Ti 07/2010-02/2020
1.6 Flexifuel 07/2010-02/2020
1.6 Ti 08/2011-12/2017
1.6 Ti 08/2011-12/2017
1.6 LPG 02/2012-02/2020
1.6 LPG 02/2012-02/2020
1.6 Ti 02/2012-12/2017
1.6 Ti 02/2012-12/2017

FOCUS III Turnier

1.6 Ti 07/2010-02/2020
1.6 Flexifuel 07/2010-02/2020
1.6 Flexifuel 07/2010-02/2020
1.6 Ti 07/2010-02/2020
1.6 Ti 07/2010-02/2020
1.6 Ti 07/2010-02/2020
1.6 Ti 08/2011-02/2020
1.6 Ti 08/2011-02/2020
1.6 LPG 02/2012-02/2020
1.6 LPG 02/2012-02/2020
1.6 Ti 02/2012-02/2020
1.6 Ti 02/2012-02/2020

MONDEO IV (BA7)

1.6 Ti 07/2010-01/2015 1.6 Ti 03/2007-01/2015 1.6 Ti 03/2007-01/2015

FIESTA Box Body/MPV (J5_, J3_)

1.4 i 04/1996-10/1999

FOCUS III Saloon

1.6 Ti 07/2010-02/2020 1.6 Flexifuel 07/2010-02/2020

1.6 Ti 07/2010-02/2020 1.6 Ti 07/2010-02/2020 1.6 Ti 07/2010-02/2020

1.6 Ti 07/2010-02/2020 1.6 Flexifuel 07/2010-02/2020

1.6 Ti 08/2011-02/2020 1.6 Ti 08/2011-02/2020

1.6 Flexifuel 07/2013-02/2020

MONDEO IV Turnier (BA7)

1.6 Ti 07/2010-01/2015 1.6 Ti 03/2007-12/2010 1.6 Ti 03/2007-12/2012

FIESTA VI (CB1, CCN)

1.6 Ti 12/2010-04/2017 1.4 10/2008-04/2017 1.25 06/2008-04/2017

1.4 10/2008-04/2017 1.6 Ti 06/2008-01/2018 1.25 06/2008-04/2017

1.25 06/2008-04/2017 1.25 06/2008-04/2017 1.4 10/2008-04/2017

1.25 06/2008-04/2017 1.6 Ti 06/2008-01/2018 1.25 06/2008-04/2017

1.4 10/2008-04/2017 1.6 Ti 06/2008-01/2018 1.25 06/2008-04/2017

1.4 10/2008-04/2017 1.6 Ti 06/2008-01/2018 1.25 06/2008-04/2017

1.4 LPG 01/2009-04/2017 1.4 LPG 01/2009-04/2017

1.4 LPG 01/2009-04/2017 1.4 LPG 01/2009-04/2017

1.4 LPG 01/2009-04/2017 1.4 LPG 01/2009-04/2017

1.6 Ti 09/2012-04/2017 1.6 Ti 09/2012-04/2017 1.6 Ti 09/2012-04/2017

1.6 03/2015-04/2017

MONDEO IV Saloon (BA7)

1.6 Ti 03/2007-01/2015 1.6 Ti 03/2007-01/2015 1.6 Ti 03/2010-01/2015

FIESTA V (JH_, JD_)

1.6 16V 11/2001-06/2008 1.4 16V 11/2001-06/2008

1.6 16V 11/2001-06/2008 1.4 16V 11/2001-06/2008

1.25 16V 05/2002-06/2008 1.25 16V 05/2002-06/2008

1.25 16V 03/2003-06/2008 1.25 16V 03/2003-06/2008

FUSION (JU_)

1.6 08/2002-11/2009 1.4 08/2002-12/2012 1.4 08/2002-12/2012

1.4 08/2002-12/2012 1.6 08/2002-11/2009 1.6 08/2002-11/2009

1.25 08/2004-12/2012 1.25 08/2004-12/2012 1.4 LPG 01/2010-12/2012

FOCUS II Saloon (DB_, FCH, DH)

1.6 04/2005-09/2012 1.6 04/2005-09/2012 1.6 04/2005-09/2012

1.6 04/2005-09/2012 1.6 04/2005-09/2012 1.4 04/2005-09/2012

1.6 Ti 04/2005-09/2012 1.4 04/2005-09/2012 1.6 Ti 04/2005-09/2012

1.6 Ti 04/2005-09/2012

FOCUS II Turnier (DA_, FFS, DS)

1.6 Ti 07/2004-09/2012 1.6 Ti 07/2004-09/2012 1.6 Ti 07/2004-09/2012

1.6 LPG 10/2009-09/2012 1.6 07/2004-07/2011 1.6 07/2004-07/2011

1.4 07/2004-09/2012 1.6 07/2004-07/2011 1.4 07/2004-09/2012

1.6 07/2004-07/2011 1.6 07/2004-07/2011

FOCUS II Convertible

1.6 10/2006-09/2010 1.6 10/2006-09/2010 1.6 10/2006-09/2010

1.6 10/2006-09/2010 1.6 10/2006-09/2010

FOCUS II (DA_, HCP, DP)

1.6 Ti 07/2004-09/2012 1.6 Ti 07/2004-09/2012 1.6 Ti 07/2004-09/2012

1.6 LPG 10/2009-07/2011 1.4 07/2004-09/2012 1.6 07/2004-09/2012

1.6 07/2004-09/2012 1.6 07/2004-09/2012 1.6 07/2004-09/2012

1.6 07/2004-09/2012 1.4 07/2004-09/2012

FIESTA Saloon

1.6 Ti 04/2010-04/2017 1.6 Ti 04/2010-04/2017 1.6 Ti 04/2010-04/2017

1.6 Ti 03/2015-04/2017 1.6 Ti 03/2015-04/2017 1.6 Ti 03/2015-04/2017

C-MAX (DM2)

1.6 02/2007-09/2010 1.6 02/2007-09/2010 1.6 02/2007-09/2010

1.6 02/2007-09/2010 1.6 02/2007-09/2010 1.6 04/2007-09/2010

1.6 04/2007-09/2010 1.6 04/2007-09/2010

B-MAX (JK)

1.4 10/2012 1.6 Ti 10/2012 1.6 Ti 10/2012 1.4 10/2012

1.4 LPG 08/2013

FIESTA VI Van

1.25 01/2009-04/2017 1.25 01/2009-04/2017 1.25 01/2009-04/2017

1.25 01/2009-04/2017 1.25 08/2008-12/2012 1.4 10/2008-12/2012

1.6 Ti-VCT 10/2008-12/2012 1.25 08/2008-12/2012 1.4 10/2008-12/2012

1.6 Ti-VCT 10/2008-12/2012

ECOSPORT

1.5 Ti 10/2013 1.5 Ti 10/2013 1.5 Ti-VCT 10/2013-06/2022

B-MAX Van (JK)

1.4 10/2012 1.6 Ti 10/2012 1.4 10/2012 1.6 Ti 10/2012

1.4 LPG 10/2012

FOCUS II Estate Van

1.6 09/2005-07/2011 1.6 Ti-VCT 09/2005-07/2011

1.6 Ti-VCT 09/2005-07/2011 1.4 09/2005-07/2011

1.6 Ti-VCT 09/2005-07/2011 1.4 09/2005-07/2011

KA+ III (UK, FK)

1.2 Ti-VCT 06/2016 1.2 Ti-VCT 06/2016 1.2 06/2016

FOCUS III Hatchback Van

1.6 Ti 01/2011-02/2020 1.6 Ti 01/2011-02/2020

FIESTA Hatchback Van (JV_)

1.4 08/1998-04/2002 TD 1.8 03/2000-08/2003 TD 1.8 03/2000-08/2003

TD 1.8 03/2000-08/2003

KA+ III Saloon (TK, FK)

1.2 (TK) 06/2016 1.2 (TK) 06/2016

FIESTA V Van

1.4 05/2002-09/2005

C-MAX II Van

1.6 Ti 10/2010-06/2019 1.6 Ti 10/2010-06/2019

GRAND C-MAX Van

1.6 Ti 12/2010-12/2014

FOCUS I (DAW, DBW)

1.6 16V 10/1998-11/2004
1.6 16V 10/1998-11/2004
1.6 16V 10/1998-11/2004
1.4 16V 10/1998-11/2004
1.4 16V 10/1998-11/2004
1.6 16V 10/1998-11/2004
1.4 16V 10/1998-11/2004
1.6 16V 10/1998-11/2004
1.4 16V 10/1998-11/2004
1.6 16V Flexifuel 01/2002-11/2004
1.4 16V 10/1998-09/1999

FOCUS I Turnier (DNW)

1.4 16V 02/1999-11/2004
1.4 16V 02/1999-11/2004
1.6 16V 02/1999-11/2004
1.6 16V 02/1999-11/2004
1.6 16V 02/1999-11/2004
1.6 16V 02/1999-11/2004
1.4 16V 02/1999-11/2004
1.6 16V 02/1999-11/2004
1.4 16V 02/1999-11/2004
1.6 16V Flexifuel 01/2002-11/2004

FOCUS I Saloon (DFW)

1.6 16V 02/1999-11/2004
1.6 16V 02/1999-11/2004
1.4 16V 02/1999-11/2004
1.6 16V 02/1999-11/2004
1.4 16V 02/1999-11/2004
1.4 16V 02/1999-11/2004
1.6 16V 02/1999-11/2004
1.6 16V 02/1999-11/2004
1.4 16V 02/1999-11/2004

FOCUS C-MAX (DM2)

1.6 10/2003-03/2007
1.6 Ti 08/2004-03/2007
1.6 10/2003-03/2007
1.6 10/2003-03/2007
1.6 10/2003-03/2007
1.6 10/2003-03/2007
1.6 Ti 08/2004-03/2007
1.8 04/2004-03/2007
2.0 03/2004-03/2007

2.0 03/2004-03/2007 1.8 04/2004-03/2007 1.6 TDCi 02/2005-03/2007

1.8 10/2003-03/2007 1.8 Flexifuel 01/2006-03/2007

1.6 TDCi 02/2005-03/2007 1.8 04/2004-03/2007 1.8 10/2003-03/2007

2.0 03/2004-03/2007 2.0 03/2004-03/2007

FOCUS I Estate Van (DNW)

1.4 04/1999-03/2005 1.6 04/1999-03/2005 1.4 04/1999-03/2005

1.4 04/1999-03/2005 1.4 04/1999-03/2005 1.6 04/1999-03/2005

1.6 04/1999-03/2005 1.6 04/1999-03/2005

MAZDA

121 III (JASM, JBSM)

1.25 03/1996-04/2003 1.25 03/1996-04/2003 1.25 03/1996-04/2003

1.25 03/1996-04/2003 1.25 03/1996-04/2003 1.25 03/1996-04/2003

2 (DY)

1.6 04/2003-06/2007 1.2 (DY3W) 04/2003-06/2007 1.4 04/2003-06/2007

1.3 L (DY3W) 04/2003-06/2007 1.3 L (DY3W) 04/2003-06/2007

1.6 02/2003-06/2007

VOLVO

S40 II (544)

1.6 01/2005-12/2012 2.0 F 10/2009-12/2012 1.8 04/2004-12/2010

1.8 FlexFuel 01/2006-12/2010 2.0 10/2006-12/2012

V50 (545)

1.6 01/2005-12/2012 1.8 04/2004-12/2010 2.0 10/2006-12/2012

1.8 FlexFuel 01/2005-12/2010 2.0 FlexFuel 01/2010-12/2012

C30 (533)

1.6 10/2006-12/2012 1.8 10/2006-12/2012