SINTLY

STARTER MOTOR

XTLSTR6316

VOLTAGE 24 V

POWER 8.30 kW

APPLICATIONS MCI

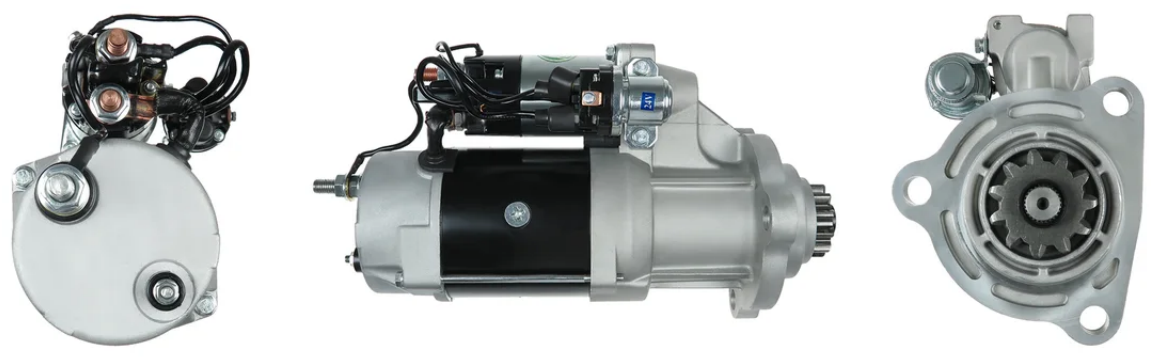

DIMENSIONS

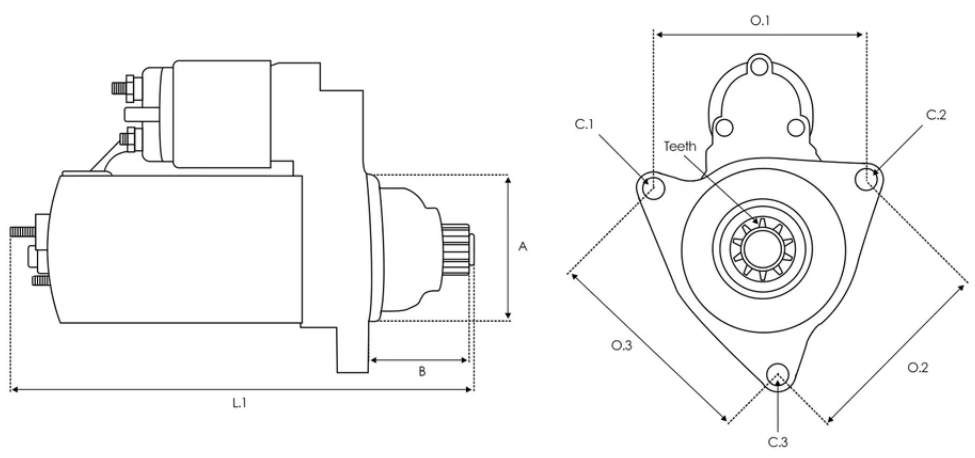

A 92.00 mm B 47.00 mm Teeth 11 qty. L.1 412.00 mm O.1 127.00 mm O.2 127.00 mm O.3 127.00 mm C.1 16.50 mm C.2 16.50 mm C.3 16.50 mm

Números OE

AINDE	CGB-1744

Código equivalente

AS-PL	S1128 UD104858S UD104859S UD12362S
AUTO MAGNETO	AM-2225G
CASCO	CST60613AS CST60613GS
CATERPILLAR	3T3153
CUMMINS	2871253 3103305 3103916 3103952
DELCO	10461754 19011507 19011522 8200034 8200041 8200201 8200314 8200337 8200410 8200412 8200522 8200614 8200700 8200704 8200706 8200709 8200719 8200724 8200725 8300018
ELECTROLOG	STR2624
LOGISTIK	339793
MITSUBISHI	M009T82378 M9T82378
NEW HOLLAND	87417338
PERKINS	CHI2405
REAL	20409316BN 20409316OE
ROBERT'S	MC2378
ROLLCO	STM777
SANDO	6060613.0 6060613.1
WAI	19531N 2-2345-DR 2-2345-DR-1 641.051.113.030 641.051.113.038 6819N 6819R
WILSON	91-27-3422

Aplicaciones

MCI

Engine 01/2004 Engine 01/2004 Engine 01/1998 Engine 01/2007