SINTLY

SINTLY | STARTER MOTOR

XTLSTR7310

VOLTAGE 12 V

POWER 4.20 kW

APPLICATIONS AGCO, CASE IH, CHALLENGER, CRYSTAL TRACTOR, FENDT, HESSTON, J...

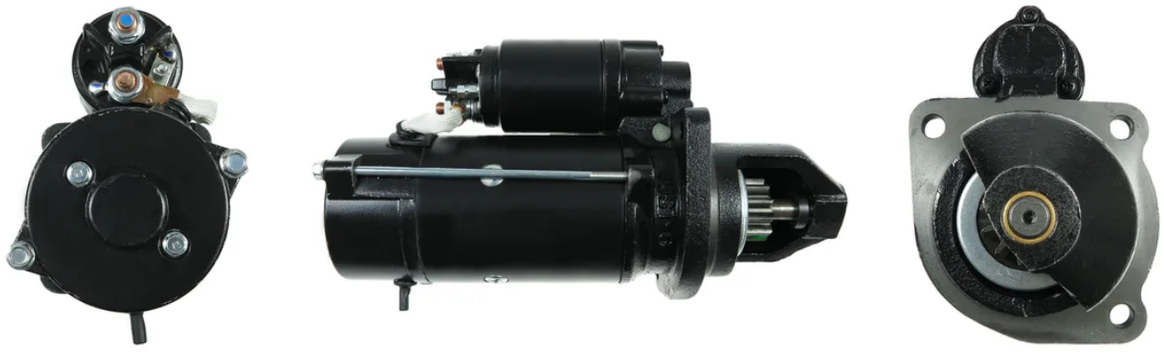

DIMENSIONS

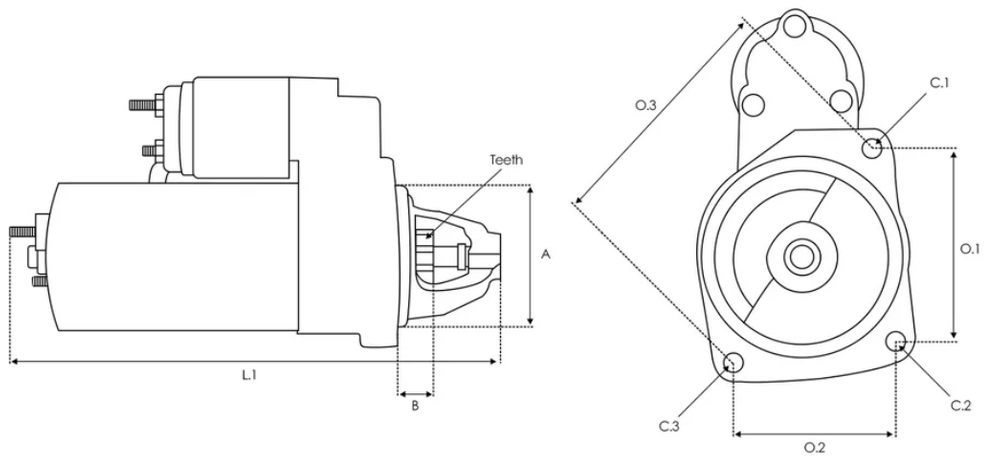

A 89.00 mm B 47.50 mm Teeth 11 qty. L.1 321.00 mm O.1 90.00 mm O.2 127.00 mm O.3 90.00 mm C.1 11.50 mm C.2 11.50 mm C.3 11.50 mm

Números OE

CASE	84284540

Código equivalente

3EFFE	PRSL814 STRL814 STRL814L
AGCO	569018D1 836873088 836873457

	V836866817 V836873457
AINDE	CGB-23257
AS-PL	S9227 UD02663S
BOSCH	0001260025 0001260026 0001260035
BTS TURBO	S100701 S101605 S103289 S104110
CARGO	113570 F032113570
CASCO	CST10049GS CST21117AS CST21117GS
CASE	47111575
CEVAM	8103
DELCO	DRS0569 DS1679
ELECTROLOG	STR10018 STR7894 STR79247
ELSTOCK	25-4033
HESSTON	836873290
ISKRA / LETRIKA	11.131.727 11.132.356 AZF4190 AZF4369 IS0836
ITAB AUTOMOTIVE	10010049OV 10021117OV
KRAUF	STI3570

KUHNER	254420 254856 254856B 254856M 254856S
LUCAS	LRS02361 LRS2361
MAHLE	72735803 MS175 MS591
MEAT & DORIA	5010948G
NEW HOLLAND	162000090722 87693781 87751000
POWERMAX	88213744
PRESTOLITE	S5001L
REAL	20401940OE 20419711BN 20419711OE
SANDO	6010049.1 6021117.0 6021117.1
SIDAT	S12BH0917
SIOM	MAV120490 MAV231170
VALTRA	83646500 836673290 836866817 89732200 VPF7263
WAI	19992N 800.008.113.010 800.008.113.090 800.008.113.211 800.008.113.280 800.008.113.311 S135.358 S145.465
WILSON	91-23-6582

WOODAUTO	MAHMS175 STR50592 STR60609 WOOSTR50592 WOOSTR60609

Aplicaciones

CHALLENGER

MT755D

8.4

670B

8.4

MT765D

8.4

652C

8.4

8333

8.4

RG1100

8.4

660B

8.4

672C

7.4

WR9740

4.9

RG645B

7.4

MT665D

8.4

MT685D

8.4

RG655B

7.4

RG635B

4.9

TG845

8.4

RG1300

8.4

MT745D

8.4

SAMPO ROSENLEW

SR1046X

4.4

SR3045C

4.4

SR3085L TS

4.4

3065L

4.4

SR1066

4.4

ZETOR

59113.4 01/1978-12/1980 5545 6522 5745 5245 5611 5645 5748 3520 01/1995 5511 3540 01/1995 5647 6518 5243 5213 5516 6511

7245

3.5 01/1984-12/1990

6341

3.9 01/1977

6748

3.4 01/1974-12/1977

6211

3.4 01/1984-12/1990

7520

4.1 01/1991

4718

2.5 01/1974-12/1977

6045

3.4 01/1980-12/1984

5945

3.4 01/1978-12/1980

4911

2.6 01/1976-12/1980

6918

3.4 01/1978-12/1980

7045

3.4 01/1980-12/1984

5011

2.6 01/1980-12/1984

7321

3.9 01/1997

6745

3.4 01/1974-12/1977

4712

2.5 01/1974-12/1977

5320

3.5 01/1992

6718

3.4 01/1974-12/1977

6011

3.4 01/1980-12/1984

6340

3.9 01/1992

7341

3.9 01/1997

5341

3.5 01/1997

5211

2.6 01/1984-12/1990

7711

3.9 01/1986-12/1990

5340

3.5 01/1992

6321

3.9 01/1977

6320

3.9 01/1992

7211

3.5 01/1984-12/1990

7011

3.4 01/1980-12/1984

7340

3.9 01/1992

5321

3.5 01/1997

6245

3.4 01/1984-12/1990

7745

3.9 01/1986-12/1990

5711

3.1 01/1974-12/1977

6945

3.4 01/1978-12/1980

6711

3.4 01/1974-12/1977

5718

3.1 01/1974-12/1977

6911

3.4 01/1978-12/1980

6212

3.4 01/1984-12/1990

CASE IH

CS 120 01/2004 CS 95 PRO 01/2008 CVX 1195 01/2003

CS 94 01/1998-12/2004 CVX 195 01/2007 CS 150 01/2004

CS 80 PRO 10/2007 CVX 175 07/2007 CVX 1190 01/2003-01/0001

CVX 1135 01/2003-01/0001 CVX 120 01/2000-05/2003

CVX 1155 01/2003-01/0001 CVX 1145 01/2003-01/0001

CS 86 01/1999-01/2004 CVX 1170 01/2003-01/0001

CVX 130 07/2000-05/2003

CS 110

4.4 01/2004

CS 85 PRO

4.4 01/2008

CVX 160

6.6 01/2007-12/2009

CS 130

6.6 01/1997-12/2003

CVX 170

6.6 01/2000-12/2003

CVX 140

6.6 01/2007-12/2009

CVX 150

6.6 01/2000-05/2003

CS 105 PRO

4.4 01/2008

CS 78

4.4 01/1998-12/2003

CVX 190

6.6 01/2007

AGCO

Engine R66 01/2008 S77 01/2010 A76 01/2008 670B EEA

S88 01/2014 S67 01/2010 S78 01/2014 670B 540C

S68 01/2014 R76 01/2008 520C

Engine

8.4 4.9

MT745D

8.4

MT755D

8.4

MT775E

9.8

MT765D

8.4

HESSTON

WR9740

4.9

WR9870

6.6

WR9735

4.9

WR9770

6.6

WR9760

4.9

WR9860

4.9

MASSEY FERGUSON

MF 34 04/2008 MF 4297 06/2009 MF 4299 06/2009

MF 470 XTRA 06/2009 MF 480 XTRA 06/2009 MF 460 XTRA 06/2009

MF 4299 08/2009 MF 5650 03/2008 MF 4292 06/2009

MF32

6.6 01/1990-12/1999

MCCORMICK

Tele-Trac

4.4

CRYSTAL TRACTOR

Orion 16

PIONEIRA

Engine 07/2008

JCB

FASTTRAC

8280 01/2010 3200 01/2010 2170 01/2010 8310 01/2010

3230 01/2010 2155 01/2010

FENDT

Vario

313 09/2010 311 10/2012 310 10/2012 312 10/2012

VALTRA

S SERIES

S262, S263 01/2008-12/2011
S374 01/2014
S280 01/2003-12/2008
S230 01/2001-12/2003
S322, S323 01/2008-12/2011
S240 01/2003-12/2006
S294 01/2014
S324 01/2014
S292, S293 01/2008-12/2011
S274 01/2014
S232, S233 01/2008-12/2013
S352, S353 01/2008-12/2011
S260 01/2003-12/2006

N SERIES

N123 01/2011
N122 01/2009-12/2011
N111, N111e 01/2005-12/2007
N142 01/2009-12/2011
N163 01/2011
N143 01/2011
N91, N101 01/2005-12/2007
N141 01/2005-12/2007
N121 01/2005-12/2007

A SERIES

A85, A95 01/2002-12/2008
A82, A92 01/2008-12/2011

T SERIES

T180, T190 01/2004-12/2007
T160/c 01/2004-12/2007
T133, T153 01/2012
T120/c 01/2004-12/2007
T234 02/2015
T174 02/2015
T172, T182 01/2009-12/2011
T144, T154 02/2015
T202 01/2009-12/2011
T140/c, T150/c 01/2004-12/2007
T203, T213 01/2012
T163e 01/2012
T194 02/2015
T173, T193 01/2012
T170/c 01/2004-12/2007
T214 02/2015
T162e 01/2009-12/2011
T132, T152 01/2009-12/2011
T171, T191 01/2007-12/2012
T130/c 01/2004-12/2007
T151e, T161 01/2011-12/2012
T121 01/2007-12/2011
T131 01/2011-12/2011