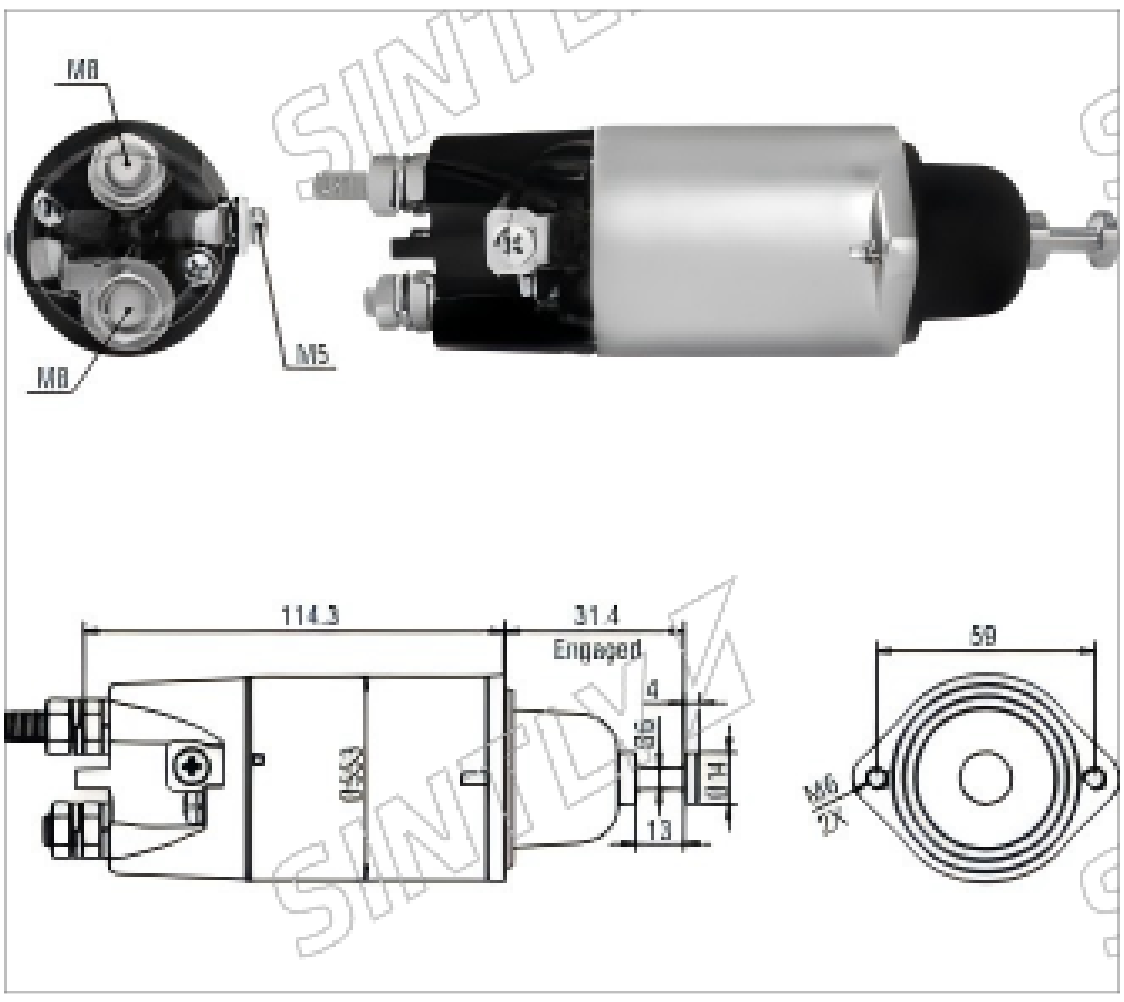

Specifications

Specification	Value
Voltage	12 V
CLAMP: B+	M8
CLAMP: MOTOR	M8
CLAMP: S	M5 Hole
new	07/2010
weight	1.034 kg

Applications

Make	Vehicle	Model Types	From	To
MITSUBISHI	Fuso	FH Series 4.9L	01/1988	01/1995

Original Code

M371X22071

M371X22371

66-8373

Equivalent Code (Vehicle Manufacturer)

M371X22071 (MITSUBISHI)

M371X22371 (MITSUBISHI)

66-8373 (WAI)