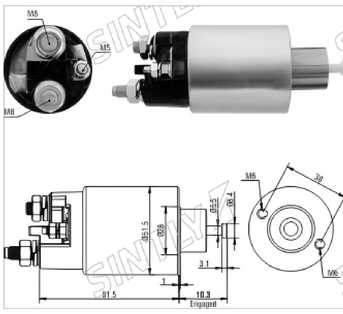


## Specifications

| Specification | Value |
|---|---|
| Voltage | 12 V |
| CLAMP: B+ | M8 |
| CLAMP: MOTOR | M8 |
| CLAMP: S | M5 Post |
| new | 03/2009 |
| weight | 0.645 kg |

## Applications

| Make | Vehicle | Model Types | From | To |
|---|---|---|---|---|
| CITROËN | AX | 11 ZA 4X4 | 01/1991 | 01/1992 |
| CITROËN | Berlingo | 1.1i MF | 01/1996 | |
| CITROËN | Berlingo | 1.1i MFHDZ | 01/1996 | |
| CITROËN | Berlingo | 1.4i MF | 01/1996 | |
| CITROËN | Berlingo | 1.4i MFHDZ | 01/1996 | |
| CITROËN | Berlingo | Furgon 1.4i M | 01/1996 | |
| CITROËN | Berlingo | Furgon 1.4i MBKFX | 01/1996 | |
| CITROËN | Berlingo | Furgon 1.6 16V MF | 01/2000 | |
| CITROËN | Berlingo | Furgon 1.6 16V MFNFU | 01/2000 | |
| CITROËN | C2 | 1.1 with JM engine | 01/2003 | |
| CITROËN | C2 | 1.4 with JM engine | 01/2003 | |
| CITROËN | C2 | 1.6 with JM engine | 01/2003 | |
| CITROËN | C3 | 1.1i with FC engine | 01/2002 | |
| CITROËN | C3 | 1.4 16V with FC engine | 01/2003 | |
| CITROËN | C3 | 1.4i Bivalent with FC engine | 01/2002 | |
| CITROËN | C3 | 1.6 16V with FC engine | 01/2002 | |
| CITROËN | C3 | Pluriel 1.4 with HB engine | 01/2003 | |
| CITROËN | C3 | Pluriel 1.6 with HB engine | 01/2003 | |
| CITROËN | C4 | 1.4 16V with LC engine | 01/2004 | |
| CITROËN | C4 | 1.6 16V with LC engine | 01/2004 | |
| CITROËN | C4 | Coupé 1.4 16V with LA engine | 01/2004 | |
| CITROËN | C4 | Coupé 1.6 16V with LA engine | 01/2004 | |
| CITROËN | Saxo | 1.0 X with S0 engine | 01/1996 | 01/1998 |
| CITROËN | Saxo | 1.0 X with S0 engine | 01/1998 | 01/2003 |
| CITROËN | Saxo | 1.0 X with S1 engine | 01/1996 | 01/1998 |
| CITROËN | Saxo | 1.0 X with S1 engine | 01/1998 | 01/2003 |
| CITROËN | Saxo | 1.1 SX with S0 engine | 01/1996 | 01/2003 |
| CITROËN | Saxo | 1.1 SX with S1 engine | 01/1996 | 01/2003 |
| CITROËN | Saxo | 1.4 VTS with S1 engine | 01/1996 | 01/2003 |
| CITROËN | Saxo | 1.4 VTS with SO engine | 01/1996 | 01/2003 |
| CITROËN | Xsara | 1.4i Coupe with N0 engine | 01/1998 | 01/2005 |
| CITROËN | Xsara | 1.4i with N1 engine | 01/1997 | 01/2005 |
| CITROËN | Xsara | 1.6 16V Coupe with N0 engine | 01/2000 | 01/2005 |
| CITROËN | Xsara | 1.6 16V with N1 engine | 01/2000 | 01/2005 |
| CITROËN | Xsara | 1.6i Coupe with N0 engine | 01/1998 | 01/2000 |
| CITROËN | Xsara | 1.6i with N1 engine | 01/1997 | 01/2000 |
| CITROËN | Xsara | Break 1.4i with N2 engine | 01/1997 | 01/2005 |
| CITROËN | Xsara | Break 1.6 16V with N2 engine | 01/2000 | 01/2005 |
| CITROËN | Xsara | Break 1.6i with N2 engine | 01/1997 | 01/2000 |
| CITROËN | Xsara | Picasso 1.6 with N68 engine | 01/2000 | |
| DACIA | Logan | | 01/2004 | |
| PEUGEOT | 106 | II 1.0i | 01/2000 | |
| PEUGEOT | 106 | II 1.1i | 01/1996 | |
| PEUGEOT | 106 | II 1.4i | 01/1996 | |
| PEUGEOT | 106 | II 1.6 S16 | 01/1996 | |
| PEUGEOT | 106 | II 1.6i | 01/1996 | |
| PEUGEOT | 206 | CC 1.6 16V with 2D engine | 01/2000 | |
| PEUGEOT | 206 | Fastback 1.1i with 2A/C engine | 01/1998 | |
| PEUGEOT | 206 | Fastback 1.4 16V with 2A/C engine | 01/2003 | |
| PEUGEOT | 206 | Fastback 1.4i with 2A/C engine | 01/1998 | |
| PEUGEOT | 206 | Fastback 1.6 16V with 2A/C engine | 01/2000 | |
| PEUGEOT | 206 | Fastback 1.6i with 2A/C engine | 01/1998 | |
| PEUGEOT | 206 | SW 1.1with 2E/K engine | 01/2002 | |
| PEUGEOT | 206 | SW 1.4 16V with 2E/K engine | 01/2003 | |
| PEUGEOT | 206 | SW 1.4 with 2E/K engine | 01/2002 | |
| PEUGEOT | 307 | 1.4 16V with 3A/C engine | 01/2003 | |
| PEUGEOT | 307 | 1.4 with 3A/C engine | 01/2000 | |
| PEUGEOT | 307 | 1.6 16V with 3A/C engine | 01/2000 | |
| PEUGEOT | 307 | Break 1.6 16V with 3E engine | 01/2002 | |
| PEUGEOT | 307 | SW 1.4 16V with 3H engine | 01/2003 | |
| PEUGEOT | 307 | SW 1.6 16V with 3H engine | 01/2003 | |
| PEUGEOT | Partner | 1.6L 16V Combispace with 5F engine | 01/2001 | 01/2002 |
| RENAULT | Kangoo | | 01/2008 | |
| RENAULT | Logan | | 01/2004 | |
| RENAULT | Sandero | | 01/2009 | |

## Original Code

| | |
|---|---|
| 7M. 993 | M000T20871 |
| M000T20872 | M0T20872 |
| MOT20871 | MOT80082 |