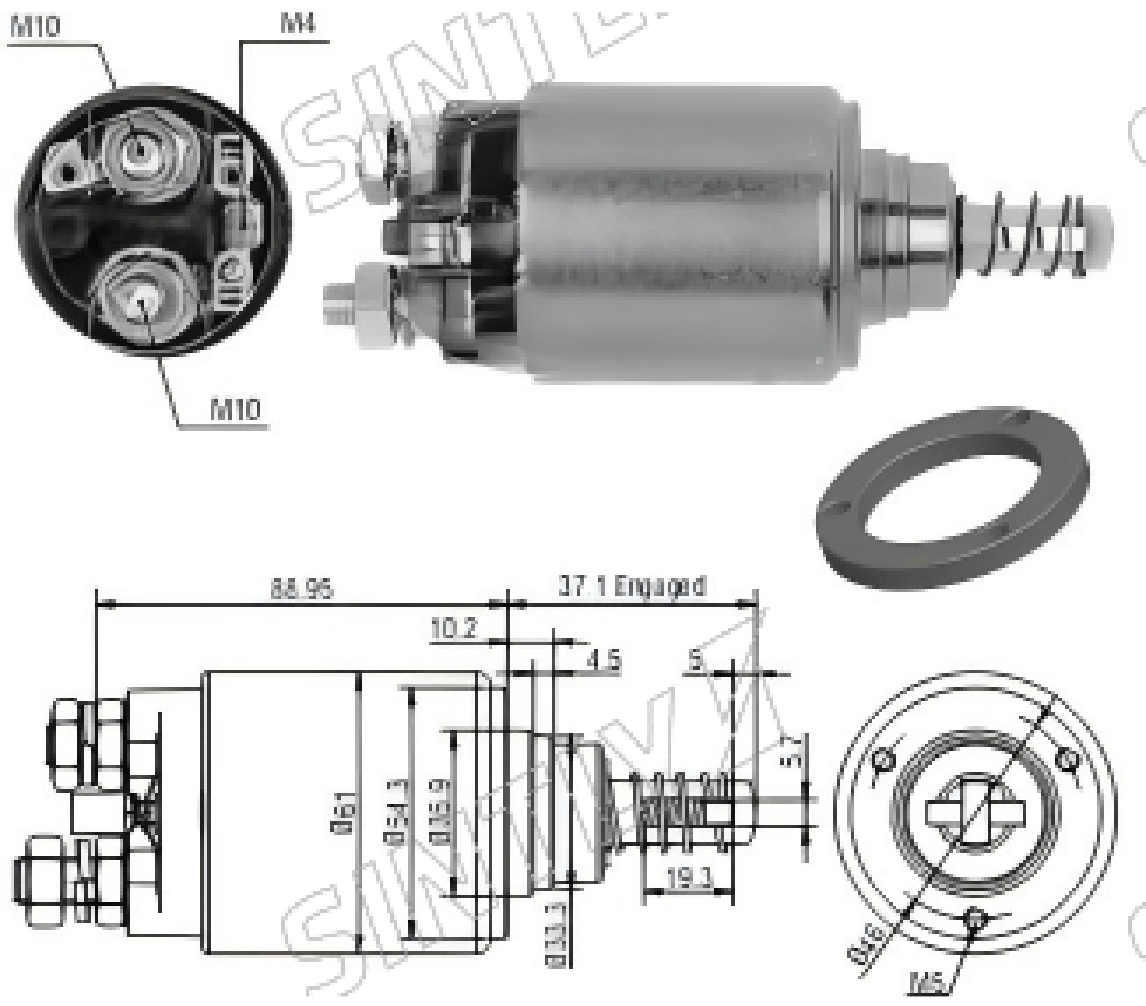

Specifications

Specification	Value
Voltage	12 V
CLAMP: B+	M10
CLAMP: MOTOR	M10
CLAMP: S	M4 Hole
weight	1.233 kg

Applications

Make	Vehicle	Model Types
MERCEDES-BENZ	T1 (601)	207 D
MERCEDES-BENZ	T1 (601)	209 D
MERCEDES-BENZ	T1 (602)	307 D
MERCEDES-BENZ	T1 (602)	407 D
OPEL	Blitz	

Original Code

0.331.401.011	0.331.401.026
0.331.401.035	0.331.402.016

Equivalent Code (Vehicle Manufacturer)

0.331.401.011 (BOSCH)	0.331.401.026 (BOSCH)
0.331.401.035 (BOSCH)	0.331.402.016 (BOSCH)