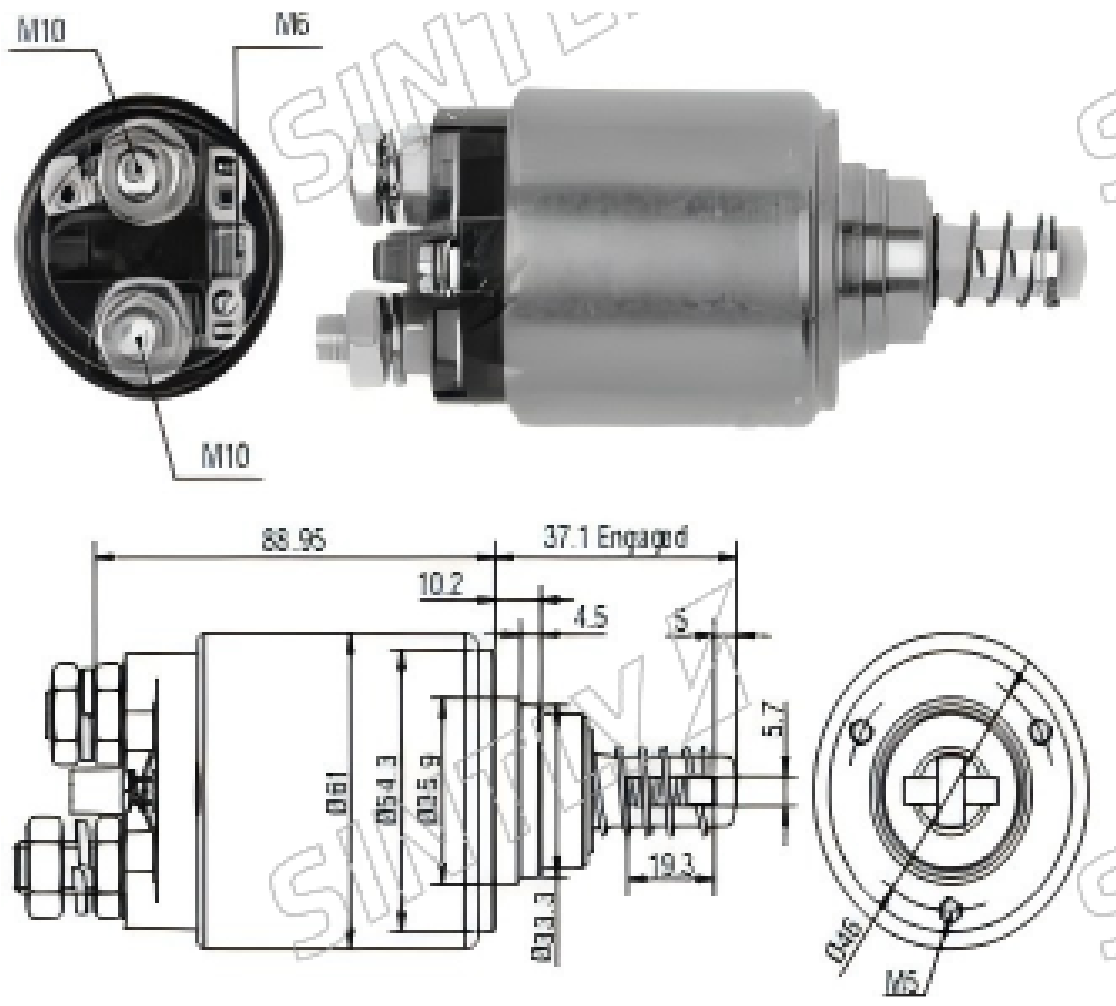

Specifications

Specification	Value
Voltage	12 V
CLAMP: B+	M10
CLAMP: MOTOR	M10
CLAMP: S	M6 Hole
weight	1.169 kg

Applications

Make	Vehicle	Model Types	From	To
CLAAS	Consul		01/1973	01/1976
CLAAS	Dominator 85		01/1973	01/1976
CLAAS	Jaguar 60 SF	with OM 352 engine	01/1974	01/1976
CLAAS	Mercator 50	with OM 314 engine	01/1973	01/1976
CLAAS	Mercator 50	with OM 352 engine	01/1973	01/1976
CLAAS	Mercator 60	with OM 314 engine	01/1973	01/1976
CLAAS	Mercator 60	with OM 352 engine	01/1973	01/1976
CLAAS	Mercator 75	with OM 314 engine	01/1973	01/1976
CLAAS	Mercator 75	with OM 352 engine	01/1973	01/1976
CLAAS	Mercator 75 R	with OM 314 engine	01/1973	01/1976
CLAAS	Mercator 75 R	with OM 352 engine	01/1973	01/1976

Original Code

0.331.402.013

0.331.402.513

66-9123

Equivalent Code (Vehicle Manufacturer)

0.331.402.013 (BOSCH)

0.331.402.513 (BOSCH)

66-9123 (WAI)