SINTLY

SINTLY | STARTER MOTOR

XTLSTR0025

VOLTAGE **12** V

POWER **1.10** kW

APPLICATIONS AUDI, BMW, SEAT, SKODA, VW

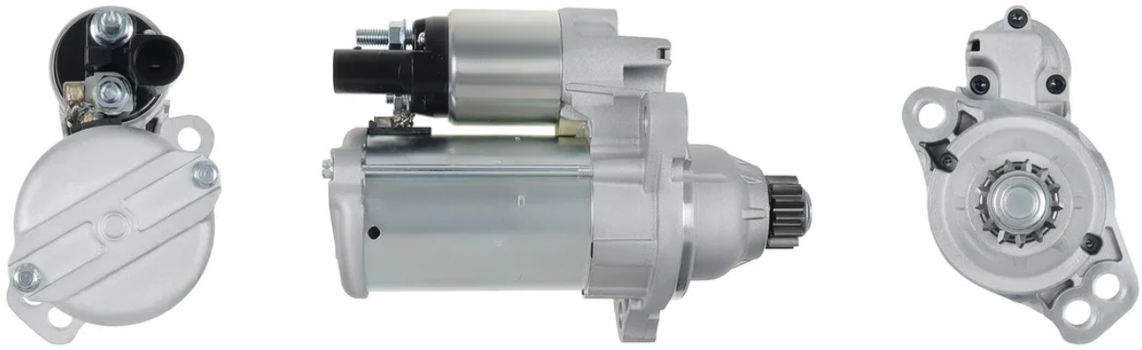

DIMENSIONS

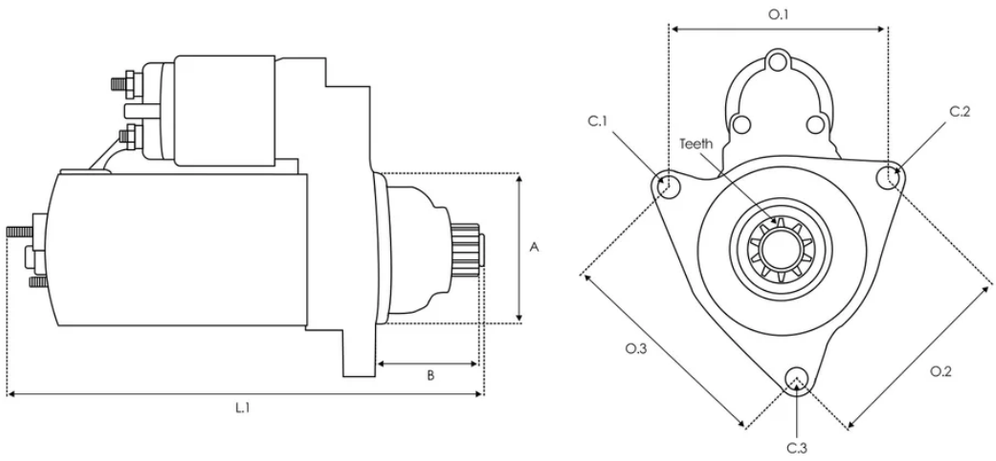

A **79.00 mm** B **61.00 mm** Teeth **13 qty.** L.1 **218.00 mm** O.1 **112.00 mm** O.2 **18.00 mm** O.3 **112.00 mm**

OE Numbers

Other	0001177007

Equivalent Code

3EFFE	PRSS447 STRS447
ACAUTO	AC-CBS5866

AINDE	CGB-54304
AIRSTAL	30-1016
ALANKO	10439541 11439541
ANDEL	ANM13022 ANM13022X
APEC	ASM1579
AS-PL	S0488 UD02355S UD15023S
ATL AUTOTECHNIK	A92920
AUTO MAGNETO	AM-2876
AUTOELECTRO	AEY2631
AUTOTEAM	SBO514
BOSCH	0001177000 0001177001 0001177006 0001177008 0001177009 0001B01283 0986026140 0986029110 1986S00880
BTS TURBO	S100559 S101344 S102067
CARGO	115696 F032115696
CASCO	CST10514AS CST10514GS CST15342GS
CEVAM	3231

DA SILVA	020865
DELCO	DRS0802 DS1912
DRI	311284132
EAI	12230
ELECTROLOG	STR00379 STR10318 STR10319 STR1848
ELSTOCK	25-4304
ERA	220786
EUROREPAR	1648219980
EUROTEC	11090251
FARCOM	107617
FEBI BILSTEIN	1004308
FRIESEN	8080410
GHIBAUDI	SG1172
HELLA	8EA012528-701 8EA738259-391
HENKEL PARTS	3117017 3117018 3117019 3117020
HERTH+BUSS	42177006

HOFFER	H5010382 H5010382G
ITAB AUTOMOTIVE	10010514AV 10010514OV
KRAUF	STB7001
KUHNER	254982B 254982S 254982V
LOGISTIK	332113
LUCAS	LRS02631 LRS2631
MAGNETI MARELLI	063725696010 MQS5696
MEAT & DORIA	5010382 5010382G
MOTRIO	8550504891 8550505887
NAPA	NPANSM1579
POWERMAX	88214397
PRESTOLITE	M1211
PROTECH	IR8239
QUINTON HAZELL	QRS2423
REAL	20401415BN 20401415OE
SANDO	6010514.0 6010514.1

SIDAT	S12BH0254 S12BH0254A2
SIOM	MAV173420
SNRA	VW9100
STARDAX	STX201095 STX201095R
STARTCAR	230ST21
STELLOX	06-10269-SX
TMI	ST01801
TRISCAN	8305 29053
VALEO	438513 458867 495109 TSC10R6 TSC12R12
VEMO	V10-12-77006
VW	02M911021D 02M911021H 02M911021HX 02M911021J 02M911024R 02M911024RX
WAI	19311R 300.564.133.000 300.916.133.010 300.916.133.210 300.916.133.215 300.916.133.280 300.916.133.281 300.916.133.340 300.916.133.440 300.916.133.460 300.916.133.500 300.916.133.605 30417N S132.417 S145.510
WALKER	WST00308

WOODAUTO STR50605 WOOSTR50605

Applications

VW

UP! (121, 122, BL1, BL2, BL3, 123)

1.0 08/2011-08/2020
1.0 08/2011-11/2019
1.0 08/2011-11/2019
1.0 08/2011-08/2020
1.0 08/2011-08/2020
1.0 TSI 05/2016-08/2019
1.0 TSI 05/2016-08/2019
1.0 GTI 11/2017-11/2023
1.0 EcoFuel 11/2012-11/2023

GOLF VII (5G1, BQ1, BE1, BE2)

2.0 GTI 04/2013-08/2020
2.0 GTI 11/2013-07/2017
2.0 GTI 04/2013-08/2020
2.0 GTI 04/2013-08/2020
2.0 GTI 11/2013-07/2017
2.0 GTI 04/2013-08/2020
2.0 GTI Clubsport S 09/2016-03/2017
2.0 GTI TCR 11/2018-08/2020
2.0 R 4motion 12/2016-08/2020
2.0 R 4motion 12/2016-08/2020
2.0 R 4motion 12/2016-08/2020
2.0 R 4motion 12/2016-08/2020
2.0 R 4motion 12/2016-08/2020
2.0 GTI Clubsport 02/2016-03/2017
2.0 GTI TCR 11/2018-08/2020
1.6 05/2014-07/2017
1.2 TSI 08/2012-03/2017
1.2 TSI 08/2012-03/2017

POLO V (6R1, 6C1)

1.6 07/2014-10/2017
1.0 01/2014-10/2017
1.6 07/2014-10/2017

1.0 01/2014-10/2017 1.2 TSI 16V 02/2014-10/2017

1.0 TSI 11/2014-10/2017 1.8 GTI 11/2014-10/2017 1.2 TSI 01/2014-10/2017

1.8 GTI 11/2014-10/2017 1.0 TSI 11/2014-10/2017

2.0 R WRC 08/2013-05/2014

GOLF VII Variant (BA5, BV5)

2.0 R 4motion 03/2015-03/2017 2.0 R 4motion 12/2016-08/2020

2.0 R 4motion 12/2016-08/2020 2.0 R 4motion 12/2016-08/2020

2.0 R 4motion 12/2016-08/2020 2.0 R 4motion 12/2016-08/2020

1.6 05/2014-07/2017 1.2 TSI 04/2014-03/2017 1.2 TSI 05/2013-03/2017

1.2 TSI 05/2013-03/2017

TIGUAN (5N_)

1.4 TSI 05/2015-07/2018 1.4 TSI 05/2015-07/2018

JETTA VII Saloon (BU3, BU4)

1.4 TSI 12/2017 1.4 TSI 12/2017 1.4 TSI 12/2017 1.4 TSI 12/2017

1.4 TSI 12/2017

LOAD UP (121, 122, BL1, BL2)

1.0 EcoFuel 12/2014-08/2020 1.0 12/2014-11/2019 1.0 12/2014-11/2019

1.0 BlueMotion 05/2016-11/2019

POLO VI (AW1, BZ1, AE1)

1.0 08/2017-02/2020 2.0 GTI 11/2017 1.0 TGI 09/2017

1.0 08/2017-02/2020 1.0 06/2017-08/2021 2.0 GTI 11/2017

1.0 TSI 09/2017 1.0 TSI 06/2017 1.0 TSI 09/2017 1.0 TSI 06/2017

1.0 TSI 06/2017 1.0 TSI 09/2017 1.0 TSI 06/2017 1.0 TSI 06/2017

1.0 TSI 09/2017 1.0 TSI 09/2017

POLO Van (6R)

1.0 01/2014-10/2017 1.0 01/2014-10/2017 1.2 TSI 01/2014-10/2017

1.2 TSI 02/2014-10/2017

JETTA IV (162, 163, AV3, AV2)

1.6 MPi 09/2015-04/2018 2.0 TSI 12/2012-12/2017

2.0 TSI 12/2012-12/2017 1.8 TSI 07/2014-12/2017 1.8 TSI 07/2014-12/2017

1.4 TSI 08/2014-12/2017 1.4 TSI 08/2014-12/2017

TRANSPORTER T6 Van (SGA, SGH, SHA, SHH)

2.0 TSI 04/2015-07/2019

BEETLE (5C1, 5C2)

2.0 TSI 12/2012-07/2019 2.0 TSI 12/2012-07/2019 1.4 TSI 12/2014-07/2019

MULTIVAN T6 (SGF, SGM, SGN, SHM, SHN)

2.0 TSI 04/2015-07/2019

BEETLE Convertible (5C7, 5C8)

2.0 TSI 12/2012-07/2019 2.0 TSI 12/2012-07/2019 1.4 TSI 12/2014-09/2018

TRANSPORTER T6 Platform/Chassis (SFD, SFE, SFL, SFZ, SJD, SJ

2.0 TSI 04/2015-06/2019

GOLF SPORTSVAN VII (AM1, AN1)

1.2 TSI 04/2014-11/2017 1.2 TSI 05/2014-11/2017 1.6 05/2014-11/2016

TRANSPORTER T6 / CARAVELLE T6 Bus (SGB, SGJ, SHB, SHJ)

2.0 TSI 04/2015-07/2019

TIGUAN (AD1, AX1)

1.4 TSI 05/2016 1.4 TSI 01/2016-03/2022 1.4 TSI 05/2016

1.4 TSI 01/2016-03/2022 1.4 TSI 05/2016

1.4 TSI 4motion 05/2016-07/2018 1.4 TSI 4motion 05/2016-07/2018

GOLF VAN VII Variant (BA5)

1.2 TSi BlueMotion 05/2013-03/2017 1.2 TSi BlueMotion 05/2013-03/2017

GOLF VII Van (5G1)

1.2 TSi BlueMotion 08/2012-03/2017 1.2 TSi BlueMotion 11/2012-03/2017

CALIFORNIA T6 Camper (SGC, SGG, SHC)

2.0 TSI 04/2015-07/2019

PASSAT B8 Variant (3G5, CB5)

1.8 TSI 02/2015 1.8 TSI 02/2015

PASSAT B8 (3G2, CB2)

1.8 TSI 02/2015 1.8 TSI 02/2015

POLO V Saloon (602, 604, 612, 614)

1.6 05/2010-05/2022 1.6 05/2010-05/2022 1.6 05/2015-03/2020

GOLF VI Convertible (517)

1.2 TSI 16V 11/2013-05/2016 1.2 TSI 16V 11/2013-05/2016

SKODA

CITIGO (NF1)

1.0 10/2011-08/2019 1.0 10/2011-08/2019 1.0 CNG 11/2012-08/2019

FABIA III (NJ3)

1.0 08/2014-06/2021 1.0 08/2014-06/2021 1.0 08/2014-06/2021

1.2 TSI 08/2014-06/2021 1.6 01/2015-06/2021 1.0 TSI 08/2014-06/2021

1.0 TSI 08/2014-06/2021 1.0 TSI 08/2014-06/2021 1.0 TSI 08/2014-06/2021

FABIA III Estate (NJ5)

1.0 10/2014-12/2022 1.0 10/2014-12/2022 1.0 10/2014-12/2022

1.6 01/2015-12/2022 1.0 TSI 08/2014-12/2022 1.0 TSI 08/2014-12/2022

1.0 TSI 08/2014-12/2022 1.0 TSI 08/2014-12/2022

OCTAVIA III Combi (5E5, 5E6)

2.0 TSI RS 11/2012-02/2017 1.6 SRE 01/2014-02/2017

1.4 TSI 08/2014-10/2020 1.4 TSI 08/2014-10/2020

OCTAVIA III (5E3, NL3, NR3)

2.0 TSI RS 02/2017-10/2020 2.0 TSI RS 02/2017-10/2020

2.0 TSI RS 02/2017-10/2020 1.6 01/2014-10/2020 1.4 TSI 08/2014-10/2020

1.4 TSI 08/2014-10/2020

FABIA III Praktik (NJ5)

1.0 10/2014-12/2022 1.0 10/2014-12/2022

SCALA (NW1)

1.0 TSI 08/2020

SUPERB III (3V3)

1.8 TSI 03/2015 1.8 TSI 03/2015 1.5 TSI 02/2017 1.5 TSI 02/2017

SUPERB III Estate (3V5)

1.8 TSI 03/2015 1.8 TSI 03/2015 1.5 TSi 02/2017 1.5 TSi 02/2017

KAMIQ (NW4)

1.0 TSI 07/2019 1.0 TSI 07/2019 1.0 TSI 07/2019

KODIAQ I (NS6, NS7, NV7)

1.5 TSI 07/2018 1.5 TSI 4x4 07/2018 1.4 TSI 10/2016

1.5 TSI 4x4 07/2018 1.5 TSI 07/2018 1.4 TSI 10/2016

2.0 TSI 4x4 10/2016 1.4 TSI 4x4 10/2016 1.4 TSI 4x4 10/2016

1.4 TSI 10/2016 1.4 TSI 10/2016

YETI (5L)

1.8 TSI 4x4 11/2009-12/2017 1.6 04/2014-12/2017

1.4 TSI 4x4 05/2015-12/2017

RAPID (NH3, NK3, NK6)

1.0 TSI 06/2017-12/2019 1.0 TSI 06/2017-12/2019

1.6 SRE 06/2015-03/2022 1.2 TSI 05/2015-12/2019 1.6 07/2012-06/2015

1.2 TSI 05/2015-12/2019

RAPID Spaceback (NH1)

1.0 TSI 06/2017-12/2019 1.0 TSI 06/2017-12/2019 1.0 TSI 06/2017-12/2019

1.0 TSI 06/2017-12/2019 1.2 TSI 05/2015-12/2019 1.2 TSI 05/2015-12/2019

1.6 07/2012-06/2015

AUDI

A3 (8V1, 8VK)

S3 quattro 02/2013-07/2014 S3 quattro 11/2012-08/2016

S3 quattro 06/2016-12/2017 S3 quattro 07/2016-12/2017

S3 quattro 06/2016-12/2017 S3 quattro 07/2016-12/2017

S3 quattro 05/2014-08/2016

A3 Limousine (8VS, 8VM)

S3 quattro 10/2013-05/2014

S3 quattro 05/2014-08/2016

S3 quattro 06/2016-10/2020

S3 quattro 06/2016-10/2020

S3 quattro 10/2013-10/2020

S3 quattro 10/2013-10/2020

A3 Sportback (8VA, 8VF)

S3 quattro 11/2012-10/2020

S3 quattro 11/2012-10/2020

S3 quattro 05/2013-08/2016

S3 quattro 06/2016-10/2020

S3 quattro 06/2016-10/2020

S3 quattro 07/2016-10/2020

S3 quattro 07/2016-10/2020

S3 quattro 05/2014-08/2016

A1 (8X1, 8XK)

1.4 TSI 11/2014-10/2018

1.4 TFSI 11/2014-10/2018

1.4 TFSI 11/2014-10/2018

A1 Sportback (8XA, 8XF)

1.4 TFSI 11/2014-10/2018

1.4 TSI 11/2014-10/2018

1.4 TFSI 11/2014-10/2018

Q3 (8UB, 8UG)

1.4 TFSI 07/2016-10/2018

1.4 TSI 10/2013-10/2018

1.4 TSI 10/2013-10/2018

1.4 TSI 10/2013-10/2018

SEAT

IBIZA IV SC (6J1, 6P5)

1.2 TSI 05/2015-12/2016 | 1.2 TSI 09/2015-12/2016 | 1.6 07/2015-12/2016

1.0 TSI 05/2015-12/2016 | 1.0 05/2015-12/2016 | 1.0 TSI 05/2015-12/2016

IBIZA IV (6J5, 6P1)

1.6 07/2015-06/2017 | 1.2 TSI 05/2015-06/2017 | 1.2 TSI 09/2015-06/2017

1.0 TSI 05/2015-06/2017 | 1.0 05/2015-06/2017 | 1.0 TSI 05/2015-06/2017

IBIZA V (KJ1, KJG)

1.0 07/2017 | 1.0 MPi 07/2018 | 1.0 01/2017 | 1.0 MPi 07/2018

1.0 MPi 07/2018 | 1.0 07/2017 | 1.0 TSI 01/2017 | 1.0 TSI 01/2017

1.0 TSI 01/2017 | 1.0 TSI 01/2017 | 1.0 TGI 11/2017

LEON ST (5F8)

2.0 Cupra 4Drive 11/2016-08/2020 | 2.0 Cupra 4Drive 11/2016-08/2020

1.2 TSI 05/2014-08/2020 | 2.0 Cupra 10/2013-08/2020

2.0 Cupra 10/2013-08/2020 | 2.0 Cupra 10/2015-08/2020

2.0 Cupra 10/2015-08/2020 | 1.2 TSI 08/2013-08/2020

1.2 TSI 11/2013-08/2018 | 1.2 TSI 11/2013-08/2018

ARONA (KJ7, KJP)

1.0 TSI 07/2017 | 1.0 TSI 07/2017 | 1.0 TSI 07/2017 | 1.0 TSI 07/2017

1.0 TGi 11/2018

Mii (KF1, KE1)

1.0 10/2011-07/2019 | 1.0 10/2011-07/2019 | 1.0 EcoFuel 10/2012-07/2019

IBIZA IV ST (6J8, 6P8)

1.0 05/2015-07/2016 1.0 TSI 05/2015-07/2016 1.2 TSI 09/2015-07/2016

1.2 TSI 05/2015-07/2016 1.0 TSI 05/2015-07/2016

TOLEDO IV (KG3)

1.2 TSI 05/2015-05/2017 1.2 TSI 05/2015-05/2017 1.6 07/2013-06/2015

LEON SC (5F5)

1.2 TSI 05/2014-08/2018 2.0 Cupra 10/2013-11/2016

2.0 Cupra 10/2013-11/2016 2.0 Cupra 10/2015-11/2016

1.2 TSI 01/2013-08/2018 1.2 TSI 02/2013-04/2014 1.2 TSI 01/2013-08/2018

LEON (5F1)

2.0 Cupra 10/2013-08/2020 1.2 TSI 04/2014-08/2020

2.0 Cupra 10/2013-08/2020 2.0 Cupra 10/2015-08/2020

2.0 Cupra 10/2015-08/2020 1.2 TSI 01/2013-08/2020

1.2 TSI 12/2012-08/2018 1.2 TSI 12/2012-08/2018

LEON ST Estate Van (5F8)

2.0 Cupra 10/2013-08/2020 1.2 TSI 01/2013-08/2018

1.2 TSI 01/2013-08/2018 1.2 TSI 05/2014-08/2018

LEON Hatchback Van (5F1)

2.0 Cupra 09/2015-10/2016 1.2 TSI 01/2013-08/2018

1.2 TSI 01/2013-08/2018 1.4 TSI 09/2012-10/2016 1.4 TSI 09/2012-10/2016

1.4 TSI 09/2012-10/2016 1.4 TSI 09/2012-10/2016

1.8 TFSI 02/2013-08/2018 1.2 TSI 04/2014-08/2018

BMW

X5 (E70)

xDrive 30 d 10/2008-07/2013