SINTLY

SINTLY | STARTER MOTOR

XTLSTR0105

VOLTAGE 12 V

POWER 1.70 kW

APPLICATIONS MAYBACH, MERCEDES-BENZ, PUCH

DIMENSIONS

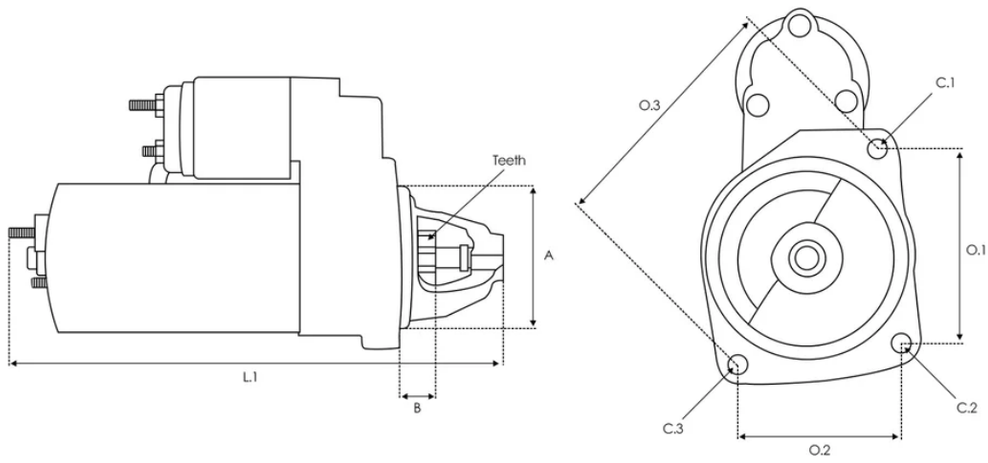

A 60.00 mm B 27.00 mm Teeth 10 qty. L.1 255.00 mm O.1 90.00 mm C.1 M10x1.5 mm C.2 M10x1.5 mm

OE Numbers

Other	0001115005 0001115097 0009060202

Equivalent Code

AS-PL	S0395
3EFFE	PRSL190 STRF445 STRL190

A.Z. MEISTERTEILE	AZMT-53-010-1028
ACAUTO	AC-CBS1072 AC-CBS1562
AINDE	AI-80017
ALANKO	10438337 10439466 10439512 10440645
ANDEL	ANM23540X
ATL AUTOTECHNIK	A17890 A21290 A21320
AUTOELECTRO	AEU1072
AUTOTEAM	SBO413 SBO413A
BORG & BECK	BST2504
BTS TURBO	S510654
CARGO	111768 F032111768
CASCO	CST10413AS CST10413GS CST15181GS
CEVAM	3868
COMLINE	CMA-621217
DELCO	16099 DRS0556 DRS7890 DRT1320
DIXIE	S-6179

DRI	325025102
DTS	S-50081 S-50303
EAI	11860
ELECTROLOG	STR10266 STR1310 STR1734
ELSTOCK	25-2275
ERA	220872 220872A 220951 220976 220976A
EUROTEC	11017890 11021320
FARCOM	103689 106234
FREY	728103602
FRIESEN	8021320
GHIBAUDI	SG0852
GPARTS	GS115005-A GS115005B-R SS115005-A SS115005B-R
HC PARTS	CS1072
HENKEL PARTS	3119976 3119978 3120032 3120033 3120034 3120178 8EA012527-251

HERTH+BUSS	42017890 42021320
HOFFER	H5010343
IKA	6.0147.9 6.7009.1
ISKRA / LETRIKA	11.139.233 AZD2135 IS9439 IS9531
ITAB AUTOMOTIVE	10010413AV 10010413OV
KRAUF	STB1072
KUHNER	101072 101072B 101072V 254260 254260B 254260V 254623 254623B 254623V 255144 255144V
LE PART	LES0529
LOGISTIK	331224
LUCAS	LRS01394 LRS1394
MAGNETI MARELLI	943253141010 944280178900 944280213200 MRS21320
MAHLE	72535196 MS1073 MS15
MEAT & DORIA	5010025
MERCEDES	0009060202 0051517701 005151770180 006151060180 006151410180 0061514201 006151420180 006151610180 0061519801 1121510001 112151000180 1121510080 61510601 61514101 61516101 61519801

	A0001519801 A0009060202 A0051517701 A005151770180 A0061510601 A006151060180 A0061514101 A006151410180 A0061514201 A006151420180 A0061516101 A006151610180 A0061519801 A1121510001 A112151000180
MOTRIO	8550505894
NK	4721351
OSSCA	02237
POWERMAX	8212734 88212734
PRESTOLITE	S1031B S1051B
PROTECH	IR8265 IR9494
PSH	550.511.102.010 550.511.102.212 550.511.102.215 550.511.102.280 550.511.102.460 550.531.102.010 550.531.102.011 550.531.102.280 550.531.102.282 550.531.102.390 550.531.102.460 550.531.102.461 550.531.102.462 550.531.102.463 S133.212 S133.411 S145.211 S145.659 S148.798
QUINTON HAZELL	QRS2067
REAL	20401314BN 20401314OE 20479181OE
REMANTE	011-001-000492R 2S0255

ROLLCO	STM1027
SANDO	6010413.0 6010413.1 6015181.1
SIDAT	S12BH0188 S12BH0188A2 S12BH0273A2
SIOM	MAV171810
SNRA	ME9016
STARDAX	STX200218 STX200218R
STARK	SKSTR-0330254
STARTCAR	860ST11
STELLOX	06-10210-SX
APEC	ASM1020
NAPA	NPANSM1020

Applications

MERCEDES-BENZ

G-CLASS (W463)

G 55 AMG (463.270, 463.271) 08/2008-06/2012

G 55 AMG (463.243, 463.246) 04/1999-07/2008

G 55 AMG (463.270, 463.271) 06/2004-07/2006

G 55 AMG (463.270, 463.271) 08/2006-12/2012

G 55 AMG (463.270, 463.271) 09/2004-12/2011

G 500 (463.247, 463.248, 463.249, 463.240, 463.241,... 04/1998-12/2015

G 320 (463.232, 463.233, 463.244, 463.245) 07/1997-08/2004

G 350 CDI (463.346) 07/2011-08/2015 G 320 CDI (463.343) 09/2006-12/2012

G 350 CDI (463.306, 463.340, 463.341, 463.346) 06/2009-12/2011

G 500 (463.222, 463.236, 463.237, 463.242) 05/2008-08/2015

G 500 (463.222, 463.236, 463.237, 463.242) 05/2008-08/2015

S-CLASS (W221, V221)

S 350 BlueTec (221.026, 221.126) 04/2011-12/2013

S 350 BlueTEC 4-matic (221.083, 221.183) 04/2011-12/2013

S 65 AMG (221.179) 10/2010-12/2013

S 350 CDI (221.022, 221.122) 06/2009-12/2013

S 320 CDI 4-matic (221.080, 221.180) 10/2006-12/2013

S 320 CDI (221.022, 221.122) 12/2005-06/2009 S 350 CDI 06/2009-12/2013

S 320 CDI 4-matic (221.080, 221.180) 10/2005-12/2013

S 600 (221.176) 12/2005-12/2013 S 65 AMG (221.179) 12/2005-12/2013

S 320 CDI 10/2005-12/2013

S 350 CDI 4-matic (221.080, 221.180) 06/2009-07/2013

S-CLASS Coupe (C216)

CL 65 AMG (216.379) 02/2011-12/2013 CL 65 AMG (216.379) 10/2006-12/2010

CL 600 (216.376) 05/2006-12/2013

S-CLASS Coupe (C215)

CL 63 AMG 09/2001-03/2006

CL 600 (215.376) 09/2002-03/2006

CL 65 AMG (215.379) 09/2003-03/2006

CL 600 (215.378) 03/1999-03/2006

CL 55 AMG Kompressor (215.374) 06/2002-03/2006

CL 500 (215.375) 03/1999-03/2006

CL 55 AMG (215.373) 10/1999-03/2006

M-CLASS (W166)

ML 350 BlueTEC 4-matic (166.024, 166.023) 06/2011-02/2015

ML 350 BlueTEC 4-matic (166.024, 166.023) 06/2011-02/2015

ML 250 CDI / BlueTEC 4-matic (166.004, 166.003) 06/2011-12/2015

S-CLASS (W220, V220)

S 600, S 600 L (220.878, 220.178) 01/2000-08/2005

S 65 AMG, S 65 AMG L (220.179) 03/2004-08/2005

S 55 AMG Kompressor (220.074, 220.174) 06/2002-08/2005

S 600, S 600 L (220.176) 09/2002-08/2005

S 430 4-matic (220.083, 220.183) 09/2002-08/2005

S 500 4-matic (220.084, 220.184) 09/2002-08/2005

S 500 (220.075, 220.175, 220.875) 10/1998-12/2003

S 500, S 500 L (220.075, 220.175, 220.875) 10/1998-08/2005

S 320 (220.065, 220.165) 10/1998-08/2005

S 500, S 500 L (220.075, 220.175, 220.875) 10/1998-08/2005

S 430, S 430 L (220.070, 220.170) 10/1998-08/2005

S 280 (220.063, 220.163) 10/1998-08/2005

S 55 AMG (220.073, 220.173) 04/1999-08/2005

R-CLASS (W251, V251)

R 500 4-matic (251.075, 251.175) 08/2005-12/2014

R 500 4-matic (251.075, 251.175) 08/2005-12/2014

R 350 CDI 4-matic (251.023, 251.123) 08/2010-12/2014

R 280 CDI 4-matic (251.020) 05/2006-12/2012

R 320 CDI 4-matic (251.022, 251.122) 01/2006-07/2010

R 280 CDI (251.121, 251.026, 251.126) 05/2006-12/2012

R 280 CDI (251.121, 251.026, 251.126) 05/2006-12/2012

R 280 CDI (251.121, 251.026, 251.126) 05/2006-12/2012

R 300 CDI (251.021, 251.121, 251.026, 251.126) 07/2009-12/2012

R 320 CDI 4-matic (251.125) 01/2006-12/2012

R 320 CDI 4-matic (251.125) 01/2006-12/2012

R 350 CDI 4-matic (251.124, 251.125) 01/2006-12/2014

R 300 CDI (251.021, 251.121, 251.026, 251.126) 07/2009-12/2012

R 300 CDI 4-matic (251.020) 07/2009-12/2012

R 350 CDI 4-matic (251.124, 251.125) 01/2006-12/2014

R 350 CDI 4-matic (251.022, 251.122) 07/2009-12/2012

R 300 CDI (251.021, 251.121, 251.026, 251.126) 07/2009-12/2012

E-CLASS T-Model (S211)

E 55 T AMG Kompressor (211.276) 07/2003-07/2009

E 55 T AMG Kompressor 09/2005-12/2006

E 500 T 4-matic (211.283) 10/2003-07/2009

E 500 T (211.270) 10/2003-07/2009

E 320 T CDI 4-matic (211.289) 03/2005-07/2009

E 280 T CDI (211.220) 03/2005-07/2009

E 320 T CDI (211.222) 03/2005-07/2009

E 280 T CDI 4-matic (211.284) 03/2005-07/2009

E 320 T CDI (211.222) 11/2007-07/2009

SL (R230)

600 (230.477) 03/2006-01/2012

600 (230.476) 04/2003-01/2012

65 AMG (230.479) 03/2004-01/2012

55 AMG (230.472) 03/2006-01/2012

65 AMG Black Series (230.479) 07/2008-01/2012

55 AMG (230.474) 10/2001-06/2002

500 (230.475) 10/2001-01/2012

55 AMG Kompressor (230.474) 06/2002-01/2012

55 AMG (230.474) 09/2003-12/2005

E-CLASS (W211)

E 55 AMG Kompressor (211.076) 10/2002-12/2008

E 500 (211.070) 03/2002-12/2008

E 500 4-matic (211.083) 10/2003-12/2008

E 320 CDI 4-matic (211.089) 03/2005-12/2008

E 320 CDI 4-matic (211.089) 03/2005-12/2008

E 280 CDI (211.020) 03/2005-12/2008

E 320 CDI (211.022) 03/2005-12/2008

E 280 CDI 4-matic (211.084) 03/2005-12/2008

E 300 BlueTEC (211.024) 09/2007-12/2008

CLS (C219)

CLS 55 AMG (219.376) 01/2005-12/2010

CLS 55 AMG 09/2005-12/2006

CLS 500 (219.375) 10/2004-12/2010

CLS 320 CDI (219.322) 01/2005-12/2010

CLS 350 CDI (219.322) 04/2009-12/2010 CLS 320 CDI 01/2005-12/2010

M-CLASS (W164)

ML 500 4-matic (164.175) 07/2005-12/2011

ML 280 CDI 4-matic (164.120) 07/2005-07/2009

ML 320 CDI 4-matic (164.122) 07/2005-07/2009

ML 350 CDI 4-matic (164.125, 164.124) 02/2010-12/2011

ML 350 CDI 4-matic (164.122) 07/2009-12/2011

ML 300 CDI 4-matic (164.120) 07/2009-12/2011

ML 300 CDI 4-matic (164.121) 02/2010-12/2011

ML 350 CDI 4-matic (164.125, 164.124) 09/2009-12/2011

ML 320 CDI 4-matic (164.124, 164.125, 164.122) 07/2005-07/2011

ML 320 CDI 4-matic (164.124, 164.125, 164.122) 07/2005-07/2011

ML 500 4-matic (164.172) 12/2007-12/2011

SLK (R171)

55 AMG (171.473) 06/2004-02/2011 55 AMG (171.473) 06/2006-02/2011

55 AMG (171.473) 09/2009-12/2011

CLS Shooting Brake (X218)

CLS 350 CDI / d (218.923) 10/2012-08/2014

CLS 350 CDI / d (218.923) 10/2012-08/2014

CLS 350 BlueTEC / d (218.926) 05/2014-12/2017

CLS 350 BlueTEC / d (218.926) 05/2014-12/2017

GL-CLASS (X166)

GL 350 CDI / BlueTec 4-matic (166.823, 166.824) 07/2012-10/2015

GL 350 CDI / BlueTEC 4-matic (166.824) 07/2012-10/2015

CLK Convertible (A209)

CLK AMG DTM (209.476) 06/2004-10/2005

CLK 55 AMG (209.476) 06/2002-03/2010

CLK 500 (209.475) 02/2003-03/2010

CLK 320 CDI (209.420) 03/2005-03/2010

GLE Coupe (C292)

350 d 4-matic (292.323, 292.324) 03/2015-10/2019

350 d 4-matic (292.323, 292.324) 03/2015-10/2019

GLE (W166)

350 d 4-matic (166.024) 04/2015-10/2018

500 4-matic (166.073) 04/2015-10/2018

GLS (X166)

350 d 4-matic (166.824) 11/2015-04/2019

SL (R129)

55 AMG 03/2000-10/2001

320 (129.064) 05/1998-10/2001

500 (129.068) 05/1998-10/2001

280 (129.059) 05/1998-10/2001

CLK (C209)

CLK 500 (209.375) 06/2002-05/2009

CLK 55 AMG (209.376) 09/2002-05/2009

CLK DTM AMG (209.376) 06/2004-10/2005

CLK 320 CDI (209.320) 01/2005-05/2009

CLK 240 (209.361) 06/2002-05/2009

C-CLASS T-Model (S202)

C 43 AMG (202.093) 08/1997-03/2001

C 240 T (202.086) 06/1997-09/2000

C 240 T (202.088) 09/2000-03/2001

C 280 T (202.089) 06/1997-03/2001

C-CLASS (W203)

C 55 AMG (203.076) 02/2004-02/2007

C 240 (203.061) 05/2000-02/2007

C 320 (203.064) 05/2000-02/2007

C 55 AMG 09/2005-12/2006

C 320 CDI (203.020) 01/2005-02/2007

C 320 4-matic (203.084) 07/2002-02/2007

SLR (R199)

5.4 (199.376) 04/2004

5.4 722 Edition 10/2006

5.4 (199.376) 09/2004

C-CLASS T-Model (S203)

C 55 AMG (203.276) 02/2004-08/2007

C 240 (203.261) 03/2001-08/2007

C 320 (203.264) 03/2001-08/2007

C 320 CDI (203.220) 06/2005-08/2007

C 240 4-matic (203.281) 07/2002-08/2007

SLR Roadster (R199)

5.4 04/2007

5.4 10/2006

G-CLASS (W461)

G 280 CDI (461.304, 461.334, 461.339, 461.344, 461.390) 04/2009

G 280 CDI (461.304, 461.334, 461.339, 461.344, 461.390) 04/2009

G 300 CDI (461.333) 04/2010-07/2023

CLS (C218)

CLS 350 CDI / d (218.323) 01/2011-08/2014

CLS 350 CDI / d (218.323) 01/2011-08/2014

CLS 350 CDI / d 4-matic (218.393) 09/2011-08/2014

CLS 350 CDI / d 4-matic (218.393) 09/2011-08/2014

CLS 350 BlueTEC / d (218.326) 06/2014-12/2017

CLS 350 BlueTEC / d 4-matic (218.394) 02/2013-12/2017

CLS 350 BlueTEC / d 4-matic (218.394) 02/2013-12/2017

CLS 350 BlueTEC / d (218.326) 06/2014-12/2017

CLS 350 BlueTEC / d (218.326) 02/2013-12/2017

CLS 350 BlueTEC / d (218.326) 02/2013-12/2017

E-CLASS (W212)

E 300 CDI / BlueTEC (212.020, 212.021, 212.027) 03/2011-12/2015

E 300 CDI / BlueTEC (212.020, 212.021, 212.027) 03/2011-12/2015

E 350 CDI 4-matic (212.093) 03/2011-12/2015

E 350 CDI (212.023) 03/2011-12/2015 E 350 CDI (212.025) 01/2009-12/2015

E 350 BlueTEC (212.024) 01/2009-12/2015

E 350 CDI 4-matic (212.089) 09/2009-08/2011

E 300 CDI (212.020) 12/2009-12/2010

E 350 BlueTEC (212.026) 05/2014-12/2015

E 350 BlueTEC 4-matic (212.094) 01/2013-12/2015

E 350 BlueTEC 01/2013-12/2015

G-CLASS Cabrio (W463)

G 500 (463) 04/1998-12/2015 G 350 CDI 07/2011-12/2015

G 320 CDI (463.303) 09/2006-12/2012 G 350 CDI (463.306) 06/2009-12/2011

G 320 (463.209, 463.250) 11/1997-08/2004

E-CLASS T-Model (S212)

E 350 CDI 4-matic (212.293) 07/2011-12/2013

E 350 CDI (212.223) 07/2011-12/2013 E 300 CDI (212.220) 12/2009-12/2010

E 350 CDI 4-matic (212.289) 11/2009-12/2011

E 300 CDI / BlueTEC (212.227, 212.221) 11/2009-12/2016

E 300 CDI / BlueTEC (212.227, 212.221) 11/2009-12/2016

E 350 BlueTEC (212.224) 11/2009-12/2013

E 350 CDI (212.225) 11/2009-12/2011

E 350 BlueTEC 11/2012-12/2016

E 350 BlueTEC 4-matic (212.294) 11/2012-12/2016

E 350 BlueTEC (212.226) 07/2014-12/2016

E 350 4-matic (212.287) 11/2009-12/2011

E 350 BlueTEC 4-matic (212.294) 07/2014-12/2016

E 350 BlueTEC 4-matic (212.294) 07/2014-12/2016

CLK (C208)

CLK 430 (208.370) 07/1998-06/2002

CLK 320 (208.365) 06/1997-06/2002

CLK 55 AMG (208.374) 08/1999-06/2002

CLK 55 AMG (208.374) 08/1999-06/2002

CLK 55 AMG (208.374) 09/2000-12/2003

E-CLASS T-Model (S210)

E 55 T AMG (210.274) 08/1997-03/2003

E 430 T 4-matic (210.283) 05/1999-03/2003

E 320 T (210.265) 12/1996-03/2003

E 430 T (210.270) 06/1997-03/2003

E 240 T (210.261) 06/1997-03/2003

E 280 T (210.263) 12/1996-03/2003

E 320 T 4-matic (210.282) 12/1996-03/2003

E 280 T 4-matic (210.281) 12/1996-03/2003

E 240 T (210.262) 08/2000-03/2003

M-CLASS (W163)

ML 430 (163.172) 02/1998-06/2005

ML 55 AMG (163.174) 02/2000-06/2005

ML 320 (163.154) 02/1998-08/2002

ML 500 (163.175) 09/2001-06/2005

ML 500 (163.175) 09/2001-06/2005

C-CLASS (W204)

C 350 CDI (204.023) 06/2011-01/2014

C 320 CDI (204.022) 01/2007-01/2014

C 350 CDI 4-matic (204.089) 07/2009-01/2014

C 350 CDI (204.022) 07/2009-01/2014

C 350 CDI 4-matic (204.092) 10/2009-01/2014

C 350 CDI (204.025) 10/2009-01/2014

C 300 CDI 4-matic (204.092) 01/2011-01/2014

C 320 CDI 4-matic (204.089) 07/2007-01/2014

CLK Convertible (A208)

CLK 430 (208.470) 09/1998-03/2002

CLK 320 (208.465) 03/1998-03/2002

CLK 55 AMG (208.474) 01/2000-03/2002

CLK 55 AMG (208.474) 01/2000-03/2002

CLK 55 AMG (208.474) 09/2001-03/2002

CLK 55 AMG (208.474) 09/2001-03/2002

E-CLASS (W210)

E 55 AMG (210.074) 08/1997-03/2002

E 280 4-matic (210.081) 12/1996-03/2002

E 320 4-matic (210.082) 06/1997-03/2002

E 280 (210.063) 12/1996-03/2002

E 320 (210.065) 06/1997-03/2002

E 430 (210.070) 06/1997-03/2002

E 240 (210.061) 06/1997-08/2000 E 240 (210.062) 08/2000-03/2002

E 430 4-matic (210.083) 05/1999-03/2002

E 55 AMG (210.074) 09/1997-12/1998

GL-CLASS (X164)

GL 350 CDI 4-matic (164.823) 10/2010-08/2012

GL 320 CDI 4-matic (164.822) 09/2006-05/2009

GL 320 CDI / 350 BlueTEC 4-matic (164.824, 164.825) 12/2009-08/2012

GL 350 CDI 4-matic (164.822) 05/2009-08/2012

GL 420 CDI 4-matic (164.828) 09/2006-05/2009

SLK (R170)

320 (170.465) 03/2000-04/2004

C-CLASS T-Model (S204)

C 350 CDI (204.223) 06/2011-08/2014 C 350 CDI (204.225) 08/2007-08/2014

C 350 CDI 4-matic (204.292) 10/2009-08/2014

C 350 CDI (204.225) 10/2009-08/2014

C 320 CDI 4-matic (204.289) 08/2007-12/2011

C 320 CDI (204.222) 08/2007-08/2014

C 350 CDI 4-matic (204.289) 08/2007-12/2011

C-CLASS Coupe (CL203)

C 320 (203.764) 09/2002-05/2008

E-CLASS Coupe (C207)

E 350 CDI (207.322) 01/2009-06/2011

E 350 BlueTEC (207.326) 06/2013-12/2016

E 350 BlueTEC / d (207.326) 05/2014-12/2016

E-CLASS Convertible (A207)

E 350 CDI (207.422) 01/2010-12/2011

E 350 BlueTEC/ d (207.426) 05/2014-12/2016

E 350 BlueTEC (207.426) 06/2013-12/2016

G-CLASS Platform/Chassis (W461)

G 280 CDi 4-matic (461.346, 461.370) 05/2007-12/2012

G 300 CDi 4-matic (461.343) 04/2010-07/2023

SPRINTER 3,5-t Van (B906)

319 CDI / BlueTEC 4x4 (906.631, 906.633, 906.635,... 03/2009-12/2018

319 CDI / BlueTEC 4x4 (906.631, 906.633, 906.635,... 03/2009-12/2018

319 CDI / BlueTEC 4x4 (906.631, 906.633, 906.635,... 03/2009-12/2018

319 CDI / BlueTEC 4x4 (906.631, 906.633, 906.635,... 03/2009-12/2018

318 CDI (906.631, 906.633, 906.635, 906.637) 06/2006-12/2009

318 CDI (906.631, 906.633, 906.635, 906.637) 06/2006-12/2009

318 CDI (906.631, 906.633, 906.635, 906.637) 06/2006-12/2009

318 CDI (906.631, 906.633, 906.635, 906.637) 06/2006-12/2009

318 CDI 4x4 (906.631, 906.633, 906.635, 906.637) 02/2008-12/2009

318 CDI 4x4 (906.631, 906.633, 906.635, 906.637) 02/2008-12/2009

319 CDI / BlueTEC (906.631, 906.633, 906.635, 906.637) 03/2009-12/2018

319 CDI / BlueTEC (906.631, 906.633, 906.635, 906.637) 03/2009-12/2018

318 CDI 4x4 (906.631, 906.633, 906.635, 906.637) 02/2008-12/2009

319 CDI / BlueTEC (906.631, 906.633, 906.635, 906.637) 03/2009-12/2018

318 CDI 4x4 (906.631, 906.633, 906.635, 906.637) 02/2008-12/2009

319 CDI / BlueTEC (906.631, 906.633, 906.635, 906.637) 03/2009-12/2018

SPRINTER 3,5-t Bus (B906)

319 CDI / BlueTEC (906.731, 906.733, 906.735) 03/2009-12/2018

319 CDI / BlueTEC (906.731, 906.733, 906.735) 03/2009-12/2018

319 CDI / BlueTEC (906.731, 906.733, 906.735) 03/2009-12/2018

318 CDI (906.731, 906.733, 906.735) 02/2008-12/2009

318 CDI (906.731, 906.733, 906.735) 02/2008-12/2009

319 CDI / BlueTEC (906.731, 906.733, 906.735) 03/2009-12/2018

318 CDI (906.731, 906.733, 906.735) 02/2008-12/2009

318 CDI (906.731, 906.733, 906.735) 02/2008-12/2009

319 CDI / BlueTEC 4x4 (906.731, 906.733, 906.735) 03/2009-12/2018

319 CDI / BlueTEC 4x4 (906.731, 906.733, 906.735) 03/2009-12/2018

319 CDI / BlueTEC 4x4 (906.731, 906.733, 906.735) 03/2009-12/2018

319 CDI / BlueTEC 4x4 (906.731, 906.733, 906.735) 03/2009-12/2018

318 CDI 4x4 (906.731, 906.733, 906.735) 02/2008-12/2009

318 CDI 4x4 (906.731, 906.733, 906.735) 02/2008-12/2009

318 CDI 4x4 (906.731, 906.733, 906.735) 02/2008-12/2009

318 CDI 4x4 (906.731, 906.733, 906.735) 02/2008-12/2009

VIANO (W639)

CDI 3.0 (639.811, 639.813, 639.815) 07/2010

CDI 3.0 (639.811, 639.813, 639.815) 03/2006

VITO / MIXTO Van (W639)

122 CDI (639.601, 639.603, 639.605) 09/2010

120 CDI (639.601, 639.603, 639.605) 07/2006

109 CDI (639.601, 639.603, 639.605) 09/2003

C-CLASS (W202)

C 280 (202.029) 06/1997-05/2000

C 240 (202.026) 06/1997-05/2000

C 43 AMG (202.033) 08/1997-05/2000

VITO Bus (W639)

122 CDI (639.701, 639.703, 639.705) 09/2010

120 CDI (639.701, 639.703, 639.705) 07/2006

111 CDI (639.701, 639.703, 639.705) 09/2003

111 CDI 4x4 (639.701, 639.703, 639.705) 09/2007-08/2014

SPRINTER 3,5-t Platform/Chassis (B906)

319 CDI / BlueTEC 4x4 (906.131, 906.133, 906.135,... 03/2009-12/2018

319 CDI / BlueTEC 4x4 (906.131, 906.133, 906.135,... 03/2009-12/2018

319 CDI / BlueTEC 4x4 (906.131, 906.133, 906.135,... 03/2009-12/2018

318 CDI (906.131, 906.133, 906.135, 906.231, 906.233,... 06/2006-12/2009

318 CDI (906.131, 906.133, 906.135, 906.231, 906.233,... 06/2006-12/2009

318 CDI (906.131, 906.133, 906.135, 906.231, 906.233,... 06/2006-12/2009

318 CDI 4x4 (906.131, 906.133, 906.135, 906.231, 906.233... 02/2008-12/2009

319 CDI / BlueTEC (906.131, 906.133, 906.135, 906.231,... 03/2009-12/2018

318 CDI 4x4 (906.131, 906.133, 906.135, 906.231, 906.233... 02/2008-12/2009

319 CDI / BlueTEC (906.131, 906.133, 906.135, 906.231,... 03/2009-12/2018

318 CDI 4x4 (906.131, 906.133, 906.135, 906.231, 906.233... 02/2008-12/2009

319 CDI / BlueTEC (906.131, 906.133, 906.135, 906.231,... 03/2009-12/2018

SPRINTER 3-t Platform/Chassis (B906)

218 CDI (906.111, 906.113, 906.211, 906.213) 06/2006-12/2009

218 CDI (906.111, 906.113, 906.211, 906.213) 06/2006-12/2009

218 CDI (906.111, 906.113, 906.211, 906.213) 06/2006-12/2009

219 CDI / BlueTEC (906.111, 906.113, 906.211, 906.213) 03/2009-12/2018

219 CDI / BlueTEC (906.111, 906.113, 906.211, 906.213) 03/2009-12/2018

SPRINTER 5-t Platform/Chassis (B906)

518 CDI (906.153, 906.155, 906.253, 906.255) 06/2006-12/2009

518 CDI (906.153, 906.155, 906.253, 906.255) 06/2006-12/2009

518 CDI (906.153, 906.155, 906.253, 906.255) 06/2006-12/2009

518 CDI (906.153, 906.155, 906.253, 906.255) 06/2006-12/2009

519 CDI / BlueTEC (906.153, 906.155, 906.253, 906.255) 03/2009-12/2018

518 CDI 4x4 (906.153, 906.155, 906.253, 906.255) 06/2006-12/2009

519 CDI / BlueTEC 4x4 (906.153, 906.155, 906.253,... 03/2009-12/2018

519 CDI / BlueTEC (906.153, 906.155, 906.253, 906.255) 03/2009-12/2018

519 CDI / BlueTEC 4x4 (906.153, 906.155, 906.253,... 03/2009-12/2018

518 CDI 4x4 (906.153, 906.155, 906.253, 906.255) 06/2006-12/2009

519 CDI / BlueTEC (906.153, 906.155, 906.253, 906.255) 03/2009-12/2018

519 CDI / BlueTEC 4x4 (906.153, 906.155, 906.253,... 03/2009-12/2018

518 CDI 4x4 (906.153, 906.155, 906.253, 906.255) 06/2006-12/2009

519 CDI / BlueTEC 4x4 (906.153, 906.155, 906.253,... 03/2009-12/2018

519 CDI / BlueTEC (906.153, 906.155, 906.253, 906.255) 03/2009-12/2018

518 CDI 4x4 (906.153, 906.155, 906.253, 906.255) 06/2006-12/2009

SPRINTER 5-t Van (B906)

518 CDI (906.653, 906.655, 906.657) 06/2006-12/2009

518 CDI (906.653, 906.655, 906.657) 06/2006-12/2009

518 CDI (906.653, 906.655, 906.657) 06/2006-12/2009

518 CDI (906.653, 906.655, 906.657) 06/2006-12/2009

519 CDI / BlueTEC 4x4 (906.653, 906.655, 906.657) 03/2009-12/2018

519 CDI / BlueTEC 4x4 (906.653, 906.655, 906.657) 03/2009-12/2018

518 CDI 4x4 (906.653, 906.655, 906.657) 06/2006-12/2016

518 CDI 4x4 (906.653, 906.655, 906.657) 06/2006-12/2016

519 CDI / BlueTEC (906.653, 906.655, 906.657) 03/2009-12/2018

518 CDI 4x4 (906.653, 906.655, 906.657) 06/2006-12/2016

518 CDI 4x4 (906.653, 906.655, 906.657) 06/2006-12/2016

519 CDI / BlueTEC (906.653, 906.655, 906.657) 03/2009-12/2018

519 CDI / BlueTEC 4x4 (906.653, 906.655, 906.657) 03/2009-12/2018

519 CDI / BlueTEC (906.653, 906.655, 906.657) 03/2009-12/2018

519 CDI / BlueTEC 4x4 (906.653, 906.655, 906.657) 03/2009-12/2018

519 CDI / BlueTEC (906.653, 906.655, 906.657) 03/2009-12/2018

SPRINTER 3-t Van (B906)

218 CDI (906.611, 906.613) 06/2006-12/2009

218 CDI (906.611, 906.613) 06/2006-12/2009

219 CDI / BlueTEC (906.611, 906.613) 03/2009-12/2018

219 CDI / BlueTEC (906.611, 906.613) 03/2009-12/2018

SPRINTER 4,6-t Platform/Chassis (B906)

418 CDI (906.153, 906.155, 906.253, 906.255) 06/2006-12/2009

418 CDI (906.153, 906.155, 906.253, 906.255) 06/2006-12/2009

419 CDI (906.153, 906.155, 906.253, 906.255) 03/2009-12/2018

418 CDI (906.153, 906.155, 906.253, 906.255) 06/2006-12/2009

418 CDI (906.153, 906.155, 906.253, 906.255) 06/2006-12/2009

419 CDI (906.153, 906.155, 906.253, 906.255) 03/2009-12/2018

419 CDI (906.153, 906.155, 906.253, 906.255) 03/2009-12/2018

419 CDI (906.153, 906.155, 906.253, 906.255) 03/2009-12/2018

SPRINTER 4,6-t Van (B906)

419 CDI (906.653, 906.655, 906.657) 03/2009-12/2018

419 CDI (906.653, 906.655, 906.657) 03/2009-12/2018

SPRINTER 5-t Bus (B906)

519 CDI (906.655, 906.657) 03/2009-12/2018

E-CLASS Platform/Chassis (VF210)

E 280 (210.663) 07/1999-11/2002

E-CLASS Platform/Chassis (VF211)

E 280 CDI (211.620) 08/2005-07/2009

SPRINTER 4-t Van (B907, B910)

419 CDI RWD (907.643, 907.645, 907.647) 02/2018-12/2021

SPRINTER 3,5-t Platform/Chassis (B907, B910)

319 CDI RWD (907.133, 907.135, 907.233, 907.235) 02/2018-12/2021

SPRINTER 5-t Platform/Chassis (B907)

519 CDI (907.153, 907.155, 907.253, 907.255) 02/2018-12/2021

SPRINTER 5-t Van (B907)

519 CDI (907.653, 907.655, 907.657) 02/2018-12/2021

SPRINTER 3,5-t Van (B907, B910)

319 CDI RWD (907.633, 907.635, 907.637) 02/2018-12/2021

SPRINTER 4-t Platform/Chassis (B907, B910)

419 CDI RWD (907.143, 907.145, 907.243, 907.245) 02/2018-12/2021

MAYBACH

57 (W240)

6.0 06/2009-12/2012

S 6.0 (240.079, 240.077) 09/2005-12/2012

5.5 (240.078) 09/2002-12/2012

6.0 (240.079) 01/2011-12/2012

62 (V240)

6.0 S (240.177) 01/2011-12/2012

5.5 (240.178) 09/2002-12/2012

S 6.0 (240.179) 09/2005-12/2012

PUCH

G-MODELL (W463)

G 500 (463.240, 463.241) 12/1997-11/2000

G 55 AMG (463.240, 463.241) 04/1999-03/2001