SINTLY

SINTLY | STARTER MOTOR

XTLSTR0189

VOLTAGE 12 V

POWER 2.20 kW

APPLICATIONS BMW

DIMENSIONS

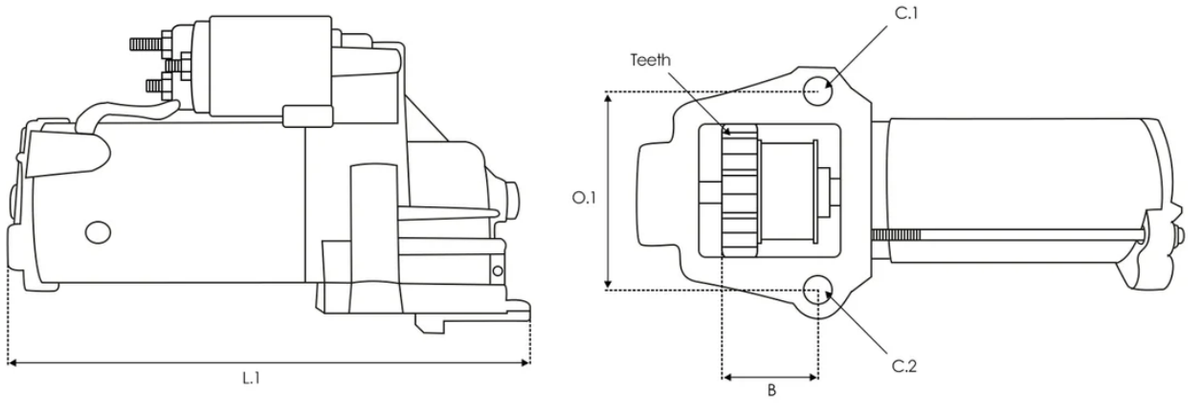

B 5.50 mm Teeth 11 qty. L.1 241.00 mm O.1 99.00 mm C.1 9.00 mm C.2 9.00 mm

OE Numbers

Other	0001139015

Equivalent Code

3EFFE	PRSE410 PRSF583 PRSL638 STRE410 STRF583 STRL638

ACAUTO	AC-CBS1467
AINDE	25-4164CT
ALANKO	10439632 11439632
ANDEL	ANM12397 ANM12397X
APEC	ASM1131
AS-PL	S0291
ATL AUTOTECHNIK	A22020
AUTO MAGNETO	AM-2216
AUTOELECTRO	AEU1467
AUTOTEAM	SBO410 SBO410A
BMW	12417798006 12417804140 12417812034 12417823700 12417823701 12418506657 12418509198 12418511746 12418515795 12418515796 12418515900 12418515901 12418519153 12418519154 12418570238 12418570383 12418577006 12418581097 12418581098 63521480 8574102
BORG & BECK	BST2431
BOSCH	0001139001 0001139002 0001148009 0001148010 0001148019 0001148020 0001148023 0001148024 0001148025 0001148026 0001148030 0001148033

	0001148034 0001148509 0986022020 0986022027 0986023960 0986023963 0986023967 1986S00863
CARGO	115335 116001 116059 F032115335 F032116001 F032116059
CASCO	CST10410AS CST10410GS
CEVAM	3190
DELCO	DRS0177 DRS1002
DRI	315051122
DTS	S-50552
EAI	12158
ELECTROLOG	STR1582 STR1601
ELSTOCK	25-4164
ELTA AUTOMOTIVE	EZ0135
ERA	220874 220874A
EUROTEC	11022020
FARCOM	106954
FEBI BILSTEIN	193234

GPARTS	GS148033B-R SS148033B-R
HC PARTS	CS1467
HELLA	8EA012527-841
HENKEL PARTS	3115220 3115221 3115222
HERTH+BUSS	42022020
HOFFER	H5010194 H5010194G
ITAB AUTOMOTIVE	10010410AV 10010410OV
KRAUF	STB1467
KUHNER	101467 101467B
LE PART	LES0579
LOGISTIK	331318
LUCAS	LRS02492 LRS2492
MAGNETI MARELLI	063521480090 MSN2195
MEAT & DORIA	5010194 5010194G
NAPA	NPANSM1131
NK	4722121

POWERMAX	88212439
PRESTOLITE	S1332B
PROTECH	IR9739
QUINTON HAZELL	QRS2416
REAL	20401014BN 20401014OE
REMANTE	011-001-000620R
RIDEX	2S0426 2S0426R
ROLLCO	STM1244
SANDO	6010410.0 6010410.1
SIDAT	S12BH0431 S12BH0431A2
SIOM	MAV124100A
SNRA	BM9029
STARDAX	STX200484R
STARK	SKSTR-0330425
STARTCAR	158ST21
TESLA	TT16422

THE NEW LINE	RE83664N
TMI	ST01676
VALEO	458854 458904
VEMO	V20-12-48009
WAI	210.538.113.010 210.558.113.010 210.558.113.211 210.558.113.212 210.558.113.215 210.558.113.280 210.558.113.460 30240N S131.682 S131.688 S144.154
WILMINK GROUP	WG2013446 WG2013447 WG2196609 WG2378147
WOODAUTO	BOS0001148009 BOS0001148019 BOS0001148033 SEG0001148033 STR50552 WOOSTR50552

Applications

BMW

1 (F20)

118 d	07/2011-06/2019	120 d	07/2011-06/2019	116 d	03/2012-02/2015
120 d	07/2011-06/2019	118 d	07/2011-06/2019	125 d	03/2012-06/2019
125 d	03/2012-06/2019	118 d	07/2011-02/2015	120 d	07/2011-02/2015
116 d	07/2011-02/2015	125 d	03/2012-02/2015		

120 d xDrive 11/2012-02/2015 114 d 11/2012-06/2015

116 d 03/2015-06/2019 118 d xDrive 07/2013-02/2015

3 Touring (E91)

318 d 07/2007-06/2012 318 d 07/2007-06/2012 316 d 09/2009-06/2012

330 d 02/2008-05/2012 330 d xDrive 01/2009-06/2012

318 d 09/2007-06/2012 320 d 02/2007-12/2010

320 d xDrive 09/2008-02/2010 318 d 09/2007-06/2012

320 d 02/2007-12/2010 320 d 03/2010-05/2012

320 d xDrive 03/2010-06/2012 320 d xDrive 07/2009-06/2012

325 d 02/2010-06/2012 320 d xDrive 03/2010-05/2012

320 d xDrive 02/2008-02/2010 320 d 02/2007-02/2010

320 d 02/2007-02/2010 320 d 06/2005-06/2012 320 d 06/2005-06/2012

320 d 06/2005-06/2012 320 d 12/2004-08/2007 330 d 06/2005-05/2012

330 d 06/2005-05/2012

5 (F10)

525 d 09/2011-10/2016 525 d xDrive 09/2011-10/2016

M 550 d xDrive 03/2012-10/2016 535 d 09/2011-10/2016

535 d xDrive 09/2011-10/2016 530 d 09/2011-10/2016

530 d xDrive 03/2011-10/2016 520 d 06/2010-06/2014

530 d 01/2010-08/2011 535 d 09/2010-08/2011 525 d 03/2010-08/2011

520 d xDrive 07/2013-06/2014 520 d 06/2010-10/2016

518 d 07/2013-10/2016 518 d 07/2013-06/2014 520 d 06/2010-10/2016

518 d 07/2013-10/2016 530 d 09/2010-10/2016

520 d xDrive 01/2013-06/2014 520 d 01/2013-06/2014

X5 (E70)

xDrive 40 d 09/2010-06/2013 xDrive 30 d 04/2010-07/2013

M 50 d 08/2011-06/2013 xDrive 35 i 04/2010-07/2013

xDrive 30 d 10/2008-03/2010 xDrive 35 i 02/2012-06/2013

xDrive 30 d 10/2008-07/2013 xDrive 30 d 10/2008-07/2013

xDrive 40 i 01/2012-06/2013

X6 (E71, E72)

xDrive 40 d 07/2009-06/2014 M 50 d 08/2011-06/2014

xDrive 30 d 04/2010-07/2014 xDrive 30 d 04/2008-03/2010

6 Coupe (F13)

640 d xDrive 03/2012-10/2017 640 d 09/2011-10/2017

7 (F01, F02, F03, F04)

740 d xDrive 09/2010-12/2012 730 d 09/2008-06/2012

750 d xDrive 07/2012-12/2015 740 d 09/2009-06/2012

730 d 02/2008-05/2015 730 d xDrive 11/2011-05/2015

740 d xDrive 07/2012-06/2015 730 d 07/2012-05/2015

740 d 07/2012-06/2015 730 i, Li 09/2009-06/2015

730 i, Li 09/2009-06/2015 730 i, Li 09/2009-06/2015

3 (E90)

318 d 09/2007-10/2011 320 d xDrive 09/2008-10/2011

318 d 09/2007-10/2011 330 d 09/2008-10/2011 320 d 09/2007-02/2010

320 d xDrive 09/2008-02/2010 330 d xDrive 09/2008-10/2011

320 d xDrive 09/2008-02/2010 318 d 02/2007-10/2011

320 d 09/2007-02/2010 318 d 02/2007-10/2011 316 d 07/2009-12/2011

320 d xDrive 03/2010-10/2011 320 d 03/2010-10/2011

325 d 03/2010-10/2011 320 d 12/2004-10/2011 320 d 12/2004-10/2011

320 d 12/2004-10/2011 330 d 09/2005-12/2011 330 d 09/2005-12/2011

320 d 12/2004-09/2007

6 Convertible (F12)

640 d xDrive 03/2012-06/2018 640 d 09/2011-06/2018

X3 (F25)

xDrive 30 d 04/2011-08/2017 xDrive 35 d 10/2011-08/2017

sDrive 18 d 10/2012-03/2014 xDrive 20 d 09/2010-03/2014

xDrive 20 d 09/2010-08/2017 xDrive 20 d 09/2010-08/2017

sDrive 18 d 04/2014-08/2017 xDrive 30 d 06/2016-08/2017

xDrive 30 d 04/2011-05/2016 xDrive 30 d 06/2011-08/2017

X3 (E83)

xDrive 20 d 09/2008-08/2010 xDrive 20 d 09/2008-08/2010

xDrive 18 d 09/2008-12/2011 2.0 sd 09/2007-08/2008

xDrive 18 d 04/2009-12/2011 2.0 d 09/2004-08/2007

5 Gran Turismo (F07)

530 d 09/2010-02/2017 535 d 07/2012-02/2017 530 d 08/2009-06/2012

530 d 07/2012-02/2017 535 d xDrive 03/2010-06/2012

530 d xDrive 06/2010-06/2012 520 d 04/2011-02/2017

530 d xDrive 07/2012-02/2017 535 d 03/2010-06/2012

535 d xDrive 07/2012-02/2017 520 d 07/2012-06/2013

520 d 07/2013-02/2017

5 Touring (F11)

M 550 d xDrive 03/2012-02/2017 525 d 09/2011-02/2017

530 d xDrive 03/2011-02/2017 535 d 09/2011-02/2017

525 d xDrive 07/2013-02/2017 530 d 09/2011-02/2017

535 d xDrive 09/2011-02/2017 525 d 09/2010-08/2011

520 d 06/2010-06/2014 535 d 09/2010-08/2011 530 d 06/2010-08/2011

520 d 06/2010-02/2017 520 d 06/2010-02/2017 518 d 07/2013-06/2014

520 d xDrive 07/2013-06/2014

3 Convertible (E93)

325 d 09/2009-09/2013 330 d 01/2009-09/2013 320 d 03/2008-02/2010

320 d 03/2008-02/2010 320 d 03/2010-10/2013 320 d 01/2008-12/2013

320 d 09/2007-02/2010 320 d 09/2007-02/2010

3 (F30, F80)

320 d 11/2011-03/2016 320 d 11/2011-10/2018 320 d 11/2011-10/2018

316 d 03/2012-10/2018 318 d 03/2012-06/2015 316 d 03/2012-10/2018

320 d xDrive 08/2012-06/2015 318 d 03/2012-10/2018

318 d 03/2012-10/2018 320 d xDrive 08/2012-10/2018

335 d xDrive 07/2013-10/2018 320 d xDrive 08/2012-10/2018

318 d xDrive 07/2013-06/2015 325 d 03/2013-02/2016

330 d xDrive 03/2013-10/2018 330 d 07/2012-10/2018

1 Coupe (E82)

118 d 09/2009-10/2013 123 d 10/2007-09/2013 120 d 09/2007-10/2013

120 d 09/2007-10/2013 123 d 10/2007-09/2013

3 Coupe (E92)

320 d 09/2006-02/2010 320 d 09/2006-02/2010 330 xd 03/2008-02/2010

330 d 01/2009-06/2013 320 d xDrive 09/2008-02/2010

330 d xDrive 02/2010-06/2013 320 d 03/2007-06/2013

320 d 03/2007-06/2013 325 d 09/2009-06/2013 320 d 03/2010-06/2013

320 d xDrive 03/2010-06/2013 320 d xDrive 09/2008-06/2013

1 Convertible (E88)

118 d 09/2008-12/2013 120 d 03/2008-12/2013 120 d 03/2008-12/2013

123 d 09/2008-12/2013 123 d 09/2008-12/2013 118 d 09/2008-12/2013

1 (E81)

118 d 09/2006-12/2011 123 d 03/2007-12/2011 123 d 03/2007-12/2011

120 d 03/2007-12/2011 118 d 09/2006-12/2011 120 d 03/2007-12/2011

116 d 11/2008-12/2011 116 d 11/2008-12/2011 116 d 01/2011-12/2011

116 d 01/2011-12/2011

X5 (F15, F85)

M 50 d 12/2013-07/2018 xDrive 30 d 08/2013-07/2018

xDrive 40 d 12/2013-07/2018 xDrive 25 d 04/2014-07/2018

xDrive 25 d 12/2013-07/2015 sDrive 25 d 12/2013-07/2018

sDrive 25 d 12/2013-07/2018 xDrive 30 d 12/2013-07/2018

sDrive 25 d 12/2013-07/2015

5 (E60)

520 d 09/2007-12/2009 520 d 09/2007-12/2009 520 d 09/2005-12/2009

520 d 09/2005-12/2009 525 d 06/2004-03/2010 520 d 09/2005-12/2009

525 d 12/2004-03/2010

X1 (E84)

xDrive 20 d 07/2012-06/2015 xDrive 25 d 10/2009-06/2015

xDrive 20 d 03/2010-06/2015 sDrive 20 d 10/2009-06/2015

xDrive 23 d 10/2009-06/2015 sDrive 16 d 04/2012-06/2015

xDrive 18 d 03/2009-06/2015 xDrive 18 d 10/2009-06/2015

sDrive 20 d 03/2010-06/2015 sDrive 18 d 03/2009-06/2015

xDrive 20 d 09/2009-06/2012 sDrive 18 d 12/2009-06/2015

sDrive 20 d 07/2012-06/2015

1 (F21)

116 d 07/2012-02/2015 120 d 07/2012-02/2015

118 d xDrive 05/2013-02/2015 116 d 12/2011-02/2015

114 d 07/2012-05/2019 125 d 12/2011-05/2019 125 d 12/2011-02/2015

118 d 12/2011-06/2019 120 d xDrive 02/2012-02/2015

118 d 12/2011-02/2015 120 d 07/2012-06/2019

120 d xDrive 01/2012-02/2015 120 d 01/2012-02/2015

116 d 03/2015-05/2019

3 Gran Turismo (F34)

320 d 03/2013-06/2015 320 d 03/2013-06/2015 318 d 03/2013-06/2015

325 d 07/2013-06/2016 320 d xDrive 07/2013-06/2015

330 d xDrive 03/2014 330 d 03/2014 335 d xDrive 03/2014

320 d xDrive 07/2013-06/2015 318 d 03/2013-06/2015

3 Touring (F31)

316 d 11/2012-06/2019 320 d 07/2012-02/2016 330 d 07/2012-06/2019

318 d 11/2012-06/2015 316 d 11/2012-06/2019 320 d 07/2012-06/2019

335 d xDrive 11/2013-06/2019 330 d xDrive 03/2013-06/2019

320 d 07/2012-06/2019 318 d 11/2012-06/2019

320 d xDrive 03/2013-06/2019 318 d xDrive 07/2013-06/2015

318 d 11/2012-06/2019 320 d xDrive 03/2013-06/2019

325 d 03/2013-02/2016 320 d xDrive 03/2013-06/2015

330 d M Performance Power Kit xDrive 03/2013-06/2019

4 Coupe (F32, F82)

435 d xDrive 11/2013-06/2020 430 d 11/2013-06/2020

420 d xDrive 11/2013-02/2015 420 d xDrive 11/2013-06/2020

420 d 07/2013-03/2015 420 d 07/2013-06/2020 420 d 07/2013-06/2020

420 d 07/2013-02/2015 430 d xDrive 03/2014-06/2020

420 d xDrive 11/2013-03/2015 425 d 03/2014-02/2016

420 d xDrive 11/2013-06/2020

2 Coupe (F22, F87)

220 d 10/2013-06/2017 225 d 01/2014-06/2017 220 d 03/2014-09/2020

220 d xDrive 03/2015-09/2020 218 d 03/2014-06/2015

220 d 10/2012-11/2014 218 d 03/2014-09/2020 220 d 11/2014-09/2020

218 d 03/2014-09/2020 220 d 11/2014-09/2020

4 Convertible (F33, F83)

420 d 10/2013-06/2015 420 d 11/2013-07/2020 430 d 07/2014-07/2020

425 d 07/2014-02/2016 435 d xDrive 07/2014-07/2020

420 d 11/2013-07/2020

6 Gran Coupe (F06)

640 d 03/2012-10/2018 640 d xDrive 03/2013-10/2018

X4 (F26)

xDrive 30 d 04/2014-03/2018 xDrive 35 d 04/2014-03/2018

xDrive 30 d 04/2015-03/2018

X6 (F16, F86)

xDrive 40 d 12/2014-07/2019 M 50 d 08/2014-07/2019

xDrive 30 d 08/2014-07/2019 xDrive 30 d 12/2014-07/2019

4 Gran Coupe (F36)

420 d 03/2014-02/2015 420 d xDrive 03/2014-02/2015

430 d xDrive 07/2014-12/2020 420 d xDrive 03/2014-12/2020

435 d xDrive 07/2014-12/2020 418 d 03/2014-06/2015

418 d 03/2014-12/2020 418 d 03/2014-12/2020 420 d 03/2014-12/2020

420 d xDrive 03/2014-12/2020 430 d 07/2014-12/2020

420 d 03/2014-12/2020

2 Convertible (F23)

220 d 03/2014-09/2020 218 d 07/2015-09/2020

1 (E87)

116 d 01/2011-12/2011 123 d 03/2007-06/2011 123 d 03/2007-06/2011

116 d 03/2009-06/2011 116 d 03/2009-06/2011 120 d 03/2007-06/2011

118 d	03/2007-06/2011	120 d	03/2007-06/2011	118 d	03/2007-06/2011
118 d	06/2004-02/2007	120 d	06/2004-06/2011	120 d	06/2004-06/2011
120 d	06/2004-02/2007				

3 Touring Van (F31)

330 d	07/2012-06/2019	330 d xDrive	03/2013-06/2019

5 Touring (E61)

520 d	09/2007-05/2010	520 d	09/2007-05/2010	525 d	03/2004-03/2007
520 d	04/2005-05/2010	520 d	04/2005-05/2010	520 d	04/2005-05/2010