SINTLY

SINTLY | STARTER MOTOR

XTLSTR1033

VOLTAGE 24 V

POWER 4.00 kW

APPLICATIONS SCANIA, STEYR, TOYOTA

DIMENSIONS

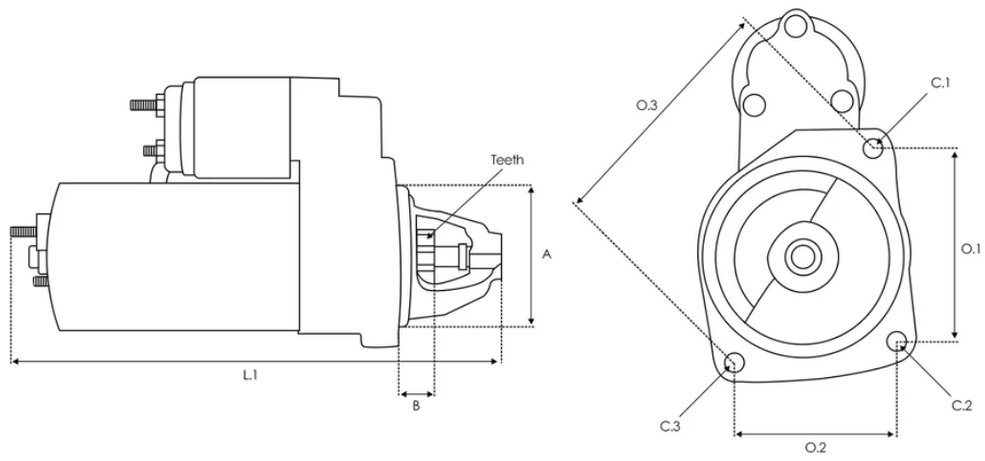

A 89.00 mm B 48.00 mm Teeth 9 qty. L.1 341.00 mm O.1 90.00 mm O.2 128.00 mm O.3 90.00 mm C.1 11.00 mm C.2 11.00 mm C.3 11.00 mm

OE Numbers

Other	0001360038

Equivalent Code

3EFFE	STRJ569 STRS090
AINDE	CGB-21280 CGB-50113

ANDEL	ANM13500X
AS-PL	S0197 UD03452S UD102938S
AUTO MAGNETO	AM-2968
AUTOELECTRO	AES9130
BOSCH	0001360010 0001368010 0001368061 0001368301 0001368316 1986S00067 1986S10084
CARGO	110527 F032110527
CASCO	CST10667AS CST10667ES
CEVAM	8661
CQ	77710236
DAF	1516825R
DELCO	19024274
DUCELLIER	11520
EAI	33518
ELECTROLOG	STR1418
ELSTOCK	45-0113

ERA	38010
FRIESEN	8811280
GHIBAUDI	SG0048
GPARTS	GS368301B-CX
HC PARTS	CS97
HELLA	8EA012586-561
ISKRA / LETRIKA	11.139.229 AZJ3496 IS9527
KRAUF	STB0097
KUHNER	1097 1097P
LOGISTIK	330249
LUCAS	LRS00930 LRS930
MAGNETI MARELLI	063720047010 943200971010 943252207010 MQS047 MSR700 MSRC97
MAHLE	72524895 MS1052
MONARK	81360038 81380038 81388010
POWER TRUCK	PTC-4005

POWERMAX	88213063
PRESTOLITE	857472GB
REAL	20401766BN 20401766EL
ROLLCO	STM1229
SANDO	6010667.0 6010667.3
SCANIA	1404788 183868 188486 263356 263357 310563 369554 571166 571420 571450 571451
SIOM	MAV126670
STARDAX	STX200842
STEYR	61200090091
VALEO	203020 455533
VOLVO	6226486 6233004
WAI	17320N 911.001.093.010 911.001.093.016 911.001.093.018 911.001.093.212 911.001.093.391 S135.731 S145.199
WILSON	91-15-7012
WOODAUTO	BOS0001368061 BOS0001368316 PRE857472GB REM19024274 STR22009 STR50224

Applications

SCANIA

4 - series bus

94 CL/230 Ethanol 01/2005-09/2010
94 CL/300 01/1999-09/2010
N 94 08/1997-08/2007
F 94 08/1997-08/2007
K 94 08/1997-08/2007
K 94 08/1997-08/2007
K 94 08/1997-08/2007
L 94 08/1997-08/2007
F 94 08/1997-08/2007
L 94 08/1997-08/2007
N 94 08/1997-08/2007
K 94 08/1997-08/2007
F 94 08/1997-08/2007
N 94 08/1997-08/2007
N 94 08/1997-08/2007
K 94 08/1997-08/2007
N 94 08/1997-08/2007
F 94 08/1997-08/2007
N 94 08/1997-08/2007
F 94 08/1997-08/2007
K 94 08/1997-08/2007
K 94 08/1997-08/2007
K 94 08/1997-08/2007
N 94 08/1997-08/2007

3 - series

93 H/280 11/1988-12/1996
93 M/250 01/1990-12/1996
93 M/250 01/1990-12/1996
T 93 H/250 01/1990-12/1996
113 M/380 01/1991-12/1996
93 H/250 01/1990-12/1996
113 M/320 01/1990-12/1996
113 H/380 01/1991-12/1996
113 H/320 01/1990-12/1996
113 M/320 01/1990-12/1996
143 M/420 01/1991-12/1996
113 H/320 01/1990-12/1996
113 H/360 01/1990-12/1996
113 M/360 05/1988-12/1989
143 E/420 01/1991-12/1996
93 M/280 01/1990-12/1996

113 M/360 01/1990-12/1996

113 H/360 01/1990-12/1996

113 M/320 05/1988-12/1989

113 E/320 11/1991-12/1996

143 H/420 01/1991-12/1996

93 M/250 10/1990-12/1996

113 H/360 01/1990-12/1996

113 E/380 01/1991-12/1996

T 113 E/360 01/1990-12/1996

93 H/250 01/1990-12/1996

113 H/380 01/1991-12/1996

T 113 H/360 01/1990-12/1996

93 M/280 01/1990-12/1996

113 M/360 01/1990-12/1996

113 E/320 11/1991-12/1996

T 113 H/360 01/1990-12/1996

113 H/320 01/1990-12/1996

93 H/280 12/1991-12/1996

113 H/360 01/1990-12/1996

T 113 H/320 01/1990-12/1996

93 M/230 01/1990-12/1991

T 93 H/280 12/1991-12/1996

T 113 H/360 01/1990-12/1996

113 E/360 01/1990-12/1996

T 113 H/320 01/1990-12/1996

93 H/280 12/1991-12/1996

93 M/250 03/1988-12/1989

93 M/230 03/1988-12/1989

T 113 E/320 01/1990-12/1996

113 M/360 01/1990-12/1996

113 M/360 01/1990-12/1996

113 E/360 01/1990-12/1996

T 143 E/420 01/1991-12/1996

113 M/320 01/1990-12/1996

T 93 H/280 12/1991-12/1996

113 E/360 01/1990-12/1996

113 E/320 11/1991-12/1996

93 M/220 12/1991-12/1996

T 113 H/320 01/1990-12/1996

113 M/380 01/1991-12/1996

93 M/250 10/1990-12/1996

T 143 H/420 01/1991-12/1996

93 M/280 03/1988-12/1989

T 93 H/250 01/1990-12/1996

T 113 E/320 01/1990-12/1996

93 H/220 12/1991-12/1996

113 E/360	01/1990-12/1996	T 113 E/320	01/1990-12/1996
143 H/420	01/1991-12/1993	T 113 E/360	01/1990-12/1996
113 E/380	01/1991-12/1996	93 M/210	03/1988-12/1991
93 H/250	03/1988-12/1989	T 113 E/360	01/1990-12/1996
93 H/250	01/1989-12/1989	143 H/400	05/1988-12/1989
143 H/450	01/1990-12/1996	143 M/470	03/1988-12/1989
143 H/450	05/1988-12/1989	T 143 H/500	01/1991-12/1996
113 H/310	01/1990-12/1991	143 H/500	01/1991-12/1996
143 M/500	01/1991-12/1996	143 M/500	01/1991-12/1996
113 H/360	01/1989-12/1989	143 M/450	01/1990-12/1996
143 H/450	01/1990-12/1996	113 H/320	05/1988-12/1989
143 M/450	01/1990-12/1996	143 H/500	01/1991-12/1996
113 H/310	01/1990-12/1991	143 H/400	01/1990-12/1991
143 E/500	01/1991-12/1996	143 M/450	05/1988-12/1989
143 H/470	01/1990-05/1991	T 143 E/450	01/1988-12/1996
113 H/310	05/1988-12/1989	113 H/310	01/1990-12/1991
143 M/470	01/1990-05/1991	113 H/360	05/1988-12/1989
143 E/450	01/1988-12/1996	T 143 E/500	01/1991-12/1996
113 H/310	01/1990-12/1991	143 H/470	03/1988-12/1989
143 E/500	01/1991-12/1996	113 H/310	01/1990-12/1991
T 143 E/450	01/1988-12/1996	113 H/310	05/1988-12/1989
143 H/450	01/1988-12/1996	143 H/470	01/1988-12/1996
143 H/400	01/1988-12/1996	T 143 H/500	01/1991-12/1996

143 E/450 01/1988-12/1996 T 143 E/500 01/1991-12/1996

113 H/310 05/1988-12/1989

2 - series

92 M/245 01/1985-12/1986 92 H/245 01/1987-12/1988

92 M/275 01/1985-12/1986 92 M/275 01/1985-03/1988

82 H/210 01/1981-12/1986 82 H/210 01/1981-12/1986

82 H/210 01/1981-12/1986 82 H/210 01/1981-12/1986

82 H/210 01/1981-12/1986 82 H/210 01/1981-12/1986

92 H/245 01/1985-12/1986 92 H/275 01/1985-12/1986

82 M/210 01/1981-12/1986 92 M/275 01/1987-12/1988

82 M/210 01/1981-12/1986 82 M/210 01/1981-12/1986

82 M/210 01/1981-12/1986 82 M/210 01/1981-12/1986

82 M/210 01/1981-12/1986 92 M/245 01/1987-12/1988

92 H/275 01/1987-12/1988 82 M/190 10/1982-03/1988

3 - series bus

K 113 11/1990 L 113 CLB 01/1990-12/1996 L 113 CLB 11/1993-12/1996

K 113 CLB 07/1990-12/1996 K 113 CLB 01/1991-12/1997

L 113 CLB 01/1990-12/1996 K 113 11/1990 K 113 11/1990

113 01/1988-06/1997 113 01/1988 113 01/1988-06/1997

113 01/1988-06/1997 113 01/1988-06/1997 113 01/1988-06/1997

113 01/1988

P I

P260 04/2004-05/2019 P300 04/2004-05/2019 P260 04/2004-05/2019

4 - series

T 114 C/340	05/1996-04/2008	94 G/300	01/2004-04/2008
94 C/300	01/1999-09/2004	94 G/300	01/1999-09/2004
94 G/270	01/1996-09/2004	144 L/530	10/1995-04/2008
94 C/310	01/1996-12/1999	144 G/460	04/1996-04/2008
144 G/530	04/1996-04/2008	144 L/460	11/1995-04/2008
94 D/310	05/2004-12/2005	94 C/260	12/1996-04/2008
114 G/340	05/1996-04/2008	94 D/220	08/1996-04/2008
124 G/360	05/1996-04/2008	124 G/400	05/1996-04/2008
114 C/340	03/1998-04/2008	144 C/530	09/1996-04/2008
94 C/260	12/1996-04/2008	114 L/340	03/1998-04/2008
94 D/260	08/1996-04/2008	94 D/260	08/1996-04/2008
144 C/460	09/1996-04/2008	T 124 G/400	03/1997-04/2008
T 124 L/400	02/1997-04/2008	T 114 G/340	05/1996-04/2008
T 144 G/530	03/1997-04/2008	94 L/310	08/1996-04/2008
124 L/400	09/1996-04/2008	T 124 G/360	03/1997-04/2008
94 L/310	08/1996-04/2008	144 L/530	11/1995-04/2008
94 C/310	08/1996-04/2008	94 G/310	08/1996-04/2008
94 C/310	08/1996-04/2008	114 G/380	03/1998-04/2008
114 C/340	03/1998-04/2008	124 C/400	09/1996-04/2008
124 L/420	09/1997-04/2008	114 G/340	05/1996-04/2008
114 C/380	03/1998-04/2008	94 G/260	08/1996-04/2008
T 114 L/340	05/1996-04/2008	114 G/380	03/1998-04/2008

124 C/360 09/1996-04/2008
124 L/420 09/1997-04/2008
94 D/310 12/1996-04/2008
114 L/380 03/1998-04/2008
94 G/220 01/1998-04/2008
124 L/360 09/1996-04/2008
94 D/310 01/1998-04/2008
124 L/400 09/1996-04/2008
T 144 G/460 03/1997-04/2008
114 C/380 03/1998-04/2008
94 D/310 01/1998-04/2008
124 G/400 05/1996-04/2008
114 L/380 03/1998-04/2008
94 G/220 08/1996-04/2008
94 G/260 08/1996-04/2008
114 L/340 03/1998-04/2008
T 144 L/460 03/1997-04/2008
124 L/420 09/1997-04/2008
94 G/260 08/1996-04/2008
94 G/310 08/1996-04/2008
T 144 L/530 03/1997-04/2008
94 D/260 08/1996-04/2008
94 D/310 12/1996-04/2008
T 124 G/400 03/1997-04/2008
94 G/260 01/1998-04/2008
T 124 L/360 02/1997-04/2008
T 114 C/340 03/1998-04/2008
164 L/580 05/2000-04/2008
114 G/340 03/1998-04/2008
T 94 G/310 12/1996-04/2008
T 144 C/530 09/1995-04/2008
T 124 L/360 05/1995-04/2008
T 94 G/230 04/1999-04/2008
124 L/440 01/2001-04/2008
T 124 C/420 05/1996-04/2008
124 L/470 01/2001-04/2008
T 94 G/310 12/1996-04/2008
114 L/340 05/1996-04/2008
164 C/580 05/2000-04/2008
T 114 G/380 03/1998-04/2008
94 D/230 08/1999-04/2008
164 G/480 05/2000-04/2008
164 C/480 05/2000-04/2008
114 L/340 05/1996-04/2006
T 94 G/310 09/1996-04/2008
T 124 G/420 09/1997-04/2008

94 D/230 08/1999-04/2008

T 124 G/420 05/1996-04/2008

T 124 C/420 05/1996-04/2008

T 144 L/530 09/1995-04/2008

114 C/340 05/1996-04/2008

T 94 G/260 12/1996-04/2008

T 124 C/400 05/1996-04/2008

T 114 G/340 03/1998-04/2008

T 114 G/340 03/1998-04/2008

T 124 G/420 09/1997-04/2008

164 G/580 05/2000-04/2008

T 144 C/460 09/1995-04/2008

T 124 L/420 09/1997-04/2008

114 G/340 03/1998-04/2008

T 114 L/340 03/1998-04/2008

T 114 C/340 03/1998-04/2008

T 124 C/420 05/1996-04/2008

164 L/480 05/2000-04/2008

T 124 L/470 01/2001-04/2008

124 L/470 01/2001-04/2008

T 114 C/380 03/1998-04/2008

T 124 C/360 09/1995-04/2008

T 144 L/460 09/1995-04/2008

T 114 L/380 03/1998-04/2008

T 114 C/380 03/1998-04/2008

T 94 G/310 12/1996-04/2008

T 114 L/340 03/1998-04/2008

T 124 G/420 05/1996-04/2008

T 94 C/310 09/1996-04/2008

T 124 L/420 05/1996-04/2008

T 94 G/220 08/1996-04/2008

T 124 L/420 09/1997-04/2008

T 124 L/420 05/1996-04/2008

T 124 L/400 05/1996-04/2008

T 124 L/360 09/1995-04/2008

T 94 L/310 09/1996-04/2008

T 94 C/260 12/1996-04/2008

STEYR

12 S 18

6.6 04/1986

8 S 14

6.6 05/1989

12 S 14

6.6 06/1986

9 S 18

6.6 04/1986

14 S 18

6.6 04/1986

8 S 18

6.6 05/1989

15 S 21

6.6 04/1986

16 S 21

6.6 04/1986

10 S 14

6.6 06/1986

11 S 18

6.6 07/1989

13 S 14

6.6 09/1988

12 S 21

6.6 04/1986

15 S 18

6.6 04/1986

15 S 14

6.6 04/1986

14 S 21

6.6 04/1986

11 S 14

6.6 07/1989

13 S 23

6.6 07/1989

17 S 18

6.6 09/1988

13 S 21

6.6 07/1989

17 S 23

6.6 09/1988

17 S 21

6.6 09/1988

14 S 14

6.6 06/1986

13 S 18

6.6 09/1988

10 S 18

6.6 04/1986

9 S 14

6.6 06/1986

16 S 18

6.6 04/1986

15 S 23

6.6 04/1986

TOYOTA

LAND CRUISER (_J6_)

4.2 (FJ60_V, FJ55_) 10/1981-01/1988