SINTLY

SINTLY | STARTER MOTOR

XTLSTR2099

VOLTAGE 12 V

POWER 1.80 kW

APPLICATIONS MERCEDES-BENZ

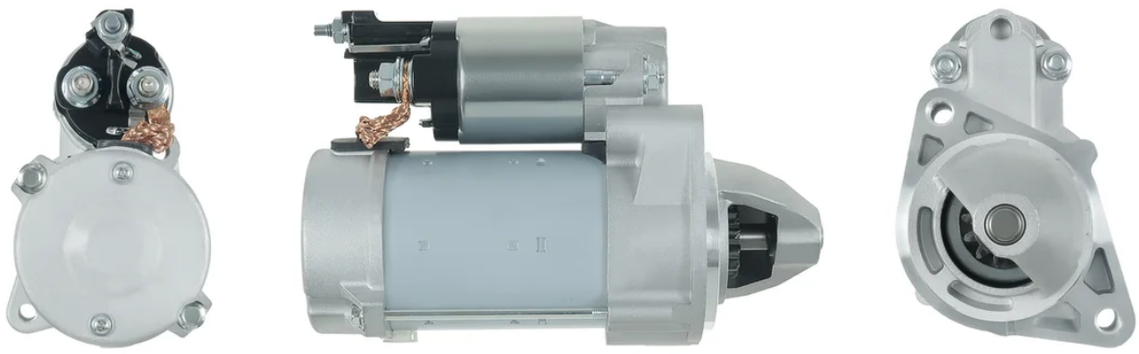

DIMENSIONS

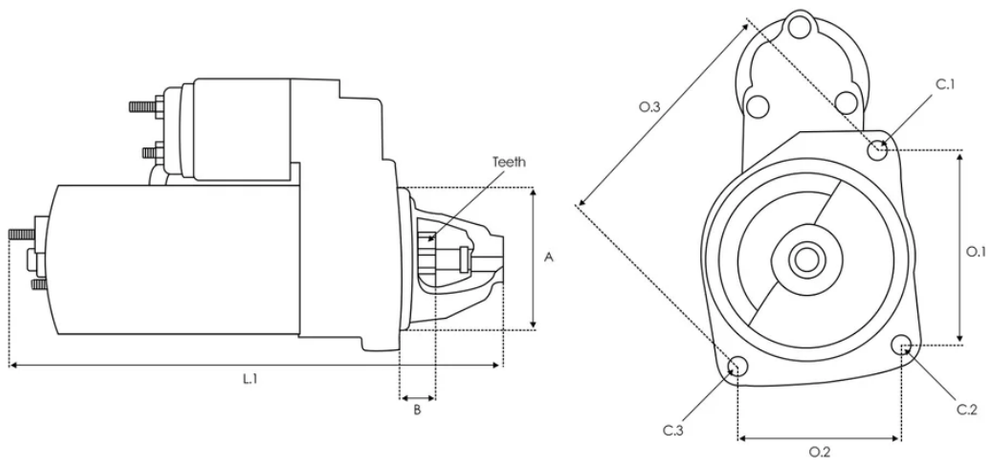

A 70.00 mm B 15.00 mm Teeth 12 qty. L.1 200.00 mm O.1 100.00 mm C.1 M10x1.5 mm C.2 M10x1.5 mm

OE Numbers

MERCEDES	0061514501

Equivalent Code

3EFFE	STRS230
ANDEL	ANM12848X

APEC	ASM1102
AS-PL	S6055 UD102376S UD102580S
AUTO MAGNETO	AM-2622
AUTOELECTRO	AEY2487
BOSCH	0399707152 0986025940
CARGO	114305 F032114305
CASCO	CST40322 CST40322AS CST40322ES CST40322GS CST40322OS CST40322RS
CEVAM	3207
DELCO	DRS0628 DS1738 RAS31739
DENSO	428000-5510 428000-5511 DSN967
DIXIE	S-80635
EAI	12256
ELECTROLOG	STR6276 STR6553
ELSTOCK	25-4159
ERA	220670

HC PARTS	CS1527
HELLA	8EA011611-481 8EA012140-531
HERTH+BUSS	42428551
KRAUF	STN1527
KUHNER	254698D 254698K 254698R
LOGISTIK	336498
LUCAS	LRS02487 LRS2487
MAGNETI MARELLI	943215271010 MSRC1527
MEAT & DORIA	5040102
MERCEDES	0009060126 000906012680 006151450180 6519060026 651906002680 6519064500 651906450080 A0009060126 A000906012680 A0061514501 A006151450180 A6519060026 A651906002680 A6519064500
NAPA	NPANSM1102
POWERMAX	88214327
PRESTOLITE	S1276D
REAL	20432223OE 20432223RC
RNL	RNL428000-5510

ROBERT'S	190-20505
ROLLCO	STM1211
SANDO	6040322 6040322.0
SIDAT	S12DE0049 S12DE0049A2
STARDAX	STX200390 STX200390R STX210315 STX210315R
STARLINE	SX 6003
WAI	30219N 550.546.122.050 550.546.122.058 550.546.122.260 550.546.122.266 550.546.122.280 S133.491 S145.249 S148.993
WILSON	91-29-5873
WOODAUTO	DENDSN967 STR70369

Applications

MERCEDES-BENZ

SPRINTER 3,5-t Tourer Bus (B907)

319 CDI All-wheel Drive (907.733) 10/2021

319 CDI (907.733, 907.735) 10/2021

315 CDI (907.731, 907.733, 907.735) 10/2021

311 CDI (907.731, 907.733, 907.735) 10/2021

317 CDI (907.731, 907.733, 907.735) 10/2021

314 CDI (907.731, 907.733, 907.735) 02/2018-12/2021

311 CDI (907.731, 907.733, 907.735) 02/2018-12/2021

316 CDI (907.731, 907.733, 907.735) 02/2018-12/2021

314 CDI All-wheel Drive (907.733) 01/2019-12/2021

316 CDI All-wheel Drive (907.733) 01/2019-12/2021

SPRINTER 4-t Platform/Chassis (B907, B910)

419 CDI RWD (907.143, 907.145, 907.243, 907.245) 10/2021

411 CDI RWD (907.141, 907.143, 907.145, 907.241, 907.243... 10/2021

419 CDI All-wheel Drive (907.143, 907.145, 907.243,... 10/2021

415 CDI RWD (907.141, 907.143, 907.145, 907.241, 907.243... 10/2021

417 CDI RWD (907.141, 907.143, 907.145, 907.241, 907.243... 10/2021

411 CDI RWD (907.141, 907.143, 907.145, 907.241, 907.243... 02/2018-12/2021

414 CDI RWD (907.143, 907.145, 907.243, 907.245, 907.141... 02/2018-12/2021

416 CDI RWD (907.143, 907.145, 907.243, 907.141, 907.241... 02/2018-12/2021

416 CDI All-wheel Drive (907.143, 907.145, 907.243,... 01/2019-12/2021

414 CDI All-wheel Drive (907.143, 907.145, 907.243,... 01/2019-12/2021

SPRINTER 5-t Platform/Chassis (B907)

519 CDI All-wheel Drive (907.153, 907.155, 907.253,... 10/2021

515 CDI RWD (907.153, 907.155, 907.253, 907.255) 10/2021

519 CDI RWD (907.153, 907.155, 907.253, 907.255) 10/2021

511 CDI (907.153, 907.155, 907.253, 907.255) 02/2018-12/2021

516 CDI (907.153, 907.155, 907.253, 907.255) 02/2018-12/2021

514 CDI (907.153, 907.155, 907.253, 907.255) 02/2018-12/2021

516 CDI All-wheel Drive (907.153, 907.155, 907.253,... 01/2019-12/2021

SPRINTER 3,5-t Van (B907, B910)

319 CDI RWD (907.633, 907.635, 907.637) 10/2021

319 CDI All-wheel Drive (907.633, 907.635, 907.637) 10/2021

311 CDI RWD (907.633, 907.635, 907.631, 907.637) 02/2018-12/2021

316 CDI RWD (907.631, 907.633, 907.635, 907.637) 02/2018-12/2021

314 CDI All-wheel Drive (907.633, 907.635, 907.637) 01/2019-12/2021

316 CDI All-wheel Drive (907.633, 907.635, 907.637) 01/2019-12/2021

314 CDI RWD (907.631, 907.633, 907.635, 907.637) 02/2018-12/2021

SPRINTER 4-t Van (B907, B910)

419 CDI All-wheel Drive (907.643, 907.645, 907.647) 10/2021

419 CDI RWD (907.643, 907.645, 907.647) 10/2021

415 CDI RWD (907.641, 907.643, 907.645, 907.647) 10/2021

411 CDI RWD (907.641, 907.643, 907.645, 907.647) 10/2021

411 CDI (910.641, 910.643) 02/2018-12/2021

411 CDI (910.641, 910.643) 02/2018-12/2021

411 CDI RWD (907.643, 907.645) 02/2018-12/2021

416 CDI All-wheel Drive (907.643, 907.645, 907.647) 01/2019-12/2021

414 CDI RWD (907.643, 907.645, 907.647) 02/2018-12/2021

416 CDI RWD (907.643, 907.645, 907.647) 02/2018-12/2021

414 CDI All-wheel Drive (907.643, 907.645, 907.647) 01/2019-12/2021

SPRINTER 5-t Van (B907)

515 CDI (907.653, 907.655, 907.657) 10/2021

519 CDI (907.653, 907.655, 907.657) 10/2021

517 CDI (907.653, 907.655, 907.657) 06/2020

519 CDI All-wheel Drive (907.653, 907.655, 907.657) 10/2021

511 CDI (907.653, 907.655, 907.657) 02/2018-12/2021

514 CDI (907.653, 907.655, 907.657) 02/2018-12/2021

516 CDI All-wheel Drive (907.653, 907.655, 907.657) 01/2019-12/2021

516 CDI (907.653, 907.655, 907.657) 02/2018-12/2021

SPRINTER 3-t Tourer Bus (B907)

215 CDI (907.721, 907.723) 10/2021

211 CDI (907.721, 907.723) 10/2021

217 CDI (907.721, 907.723) 10/2021

211 CDI (907.721, 907.723) 02/2018-12/2021

214 CDi (907.721, 907.723) 02/2018-12/2021

216 CDi (907.721, 907.723) 02/2018-12/2021

SPRINTER 3,5-t Platform/Chassis (B907, B910)

319 CDI RWD (907.133, 907.135, 907.233, 907.235) 10/2021

319 CDI All-wheel Drive (907.133, 907.135, 907.233) 10/2021

316 CDI RWD (907.131, 907.133, 907.135, 907.231, 907.233... 02/2018-12/2021

314 CDI RWD (907.131, 907.133, 907.135, 907.231, 907.233... 02/2018-12/2021

311 CDI RWD (907.131, 907.133, 907.135, 907.231, 907.233... 02/2018-12/2021

314 CDI All-wheel Drive (907.133, 907.135, 907.233,... 01/2019-12/2021

316 CDI All-wheel Drive (907.133, 907.135, 907.233,... 01/2019-12/2021

CLS (C218)

CLS 250 CDI / BlueTEC / d (218.303, 218.304) 04/2011-12/2017

CLS 250 BlueTEC / d 4-matic (218.397) 05/2014-12/2017

CLS 220 BlueTEC / d (218.301) 05/2014-12/2017

C-CLASS (W204)

C 250 CDI 4-matic (204.082) 01/2011-01/2014

C 180 CDI (204.000) 04/2010-03/2014

C 200 CDI (204.001) 11/2009-03/2014

C 250 CDI (204.003) 08/2008-01/2014

C 220 CDI (204.002) 12/2008-01/2014

C 220 CDI (204.002) 10/2008-01/2014

C 220 CDI 4-matic (204.084) 02/2013-01/2014

VITO Bus (W639)

113 CDI (639.701, 639.703, 639.705) 09/2010

113 CDI 4x4 (639.701, 639.703, 639.705) 09/2010-08/2014

116 CDI 4x4 (639.701, 639.703, 639.705) 09/2010-08/2014

110 CDI (639.701, 639.703, 639.705) 09/2010-08/2014

116 CDI (639.701, 639.703, 639.705) 09/2010

VITO / MIXTO Van (W639)

113 CDI (639.601, 639.603, 639.605) 09/2010

116 CDI (639.601, 639.603, 639.605) 09/2010

110 CDI (639.601, 639.603, 639.605) 09/2010

116 CDI 4x4 (639.601, 639.603, 639.605) 09/2010

113 CDI 4x4 (639.601, 639.603, 639.605) 09/2010

VIANO (W639)

CDI 2.2 4-matic (639.811, 639.813, 639.815, 639.711,... 07/2010

CDI 2.2 (639.811, 639.813, 639.815, 639.711, 639.713) 07/2010

C-CLASS T-Model (S204)

C 250 CDI 4-matic (204.282) 04/2010-08/2014

C 200 CDI (204.201) 08/2010-08/2014

C 180 CDI (204.200) 04/2010-08/2014

C 220 CDI (204.202) 12/2008-08/2014

C 250 CDI (204.203) 01/2009-08/2014

C 220 CDI 4-matic (204.284) 02/2013-08/2014

C-CLASS Coupe (C204)

C 220 CDI (204.302) 06/2011

C 250 CDI (204.303) 06/2011

E-CLASS (W212)

E 250 CDI / BlueTEC 4-matic (212.082, 212.097) 01/2011-12/2015

E 220 CDI / BlueTEC (212.001, 212.002) 01/2009-12/2016

E 250 CDI / BlueTEC (212.003, 212.004) 01/2009-12/2016

E 220 CDI 01/2009-12/2015

E 200 CDI / BlueTEC (212.005, 212.006) 01/2009-12/2015

E 220 BlueTEC 4-matic (212.011) 01/2015-12/2015

E 220 BlueTEC (212.001) 05/2014-12/2015

E-CLASS T-Model (S212)

E 250 CDI / BlueTEC 4-matic (212.282, 212.297) 07/2010-12/2016

E 250 CDI / BlueTEC (212.203, 212.204) 11/2009-12/2016

E 200 CDI / BlueTEC (212.205, 212.206) 11/2009-12/2016

E 220 CDI / BlueTEC (212.202, 212.201) 11/2009-12/2016

E 220 CDI (212.202) 08/2009-08/2014

E 220 BlueTEC 4-matic (212.211) 12/2014-12/2016

E 220 BlueTEC 05/2015-12/2016

SPRINTER 3,5-t Bus (B906)

316 CDI 4x4 (906.731, 906.733, 906.735) 08/2011-12/2018

316 CDI 4x4 (906.731, 906.733, 906.735) 08/2011-12/2018

316 CDI 4x4 (906.731, 906.733, 906.735) 08/2011-12/2018

316 CDI (906.731, 906.733, 906.735) 08/2011-12/2018

316 CDI (906.731, 906.733, 906.735) 08/2011-12/2018

316 CDI (906.731, 906.733, 906.735) 08/2011-12/2018

311 CDI (906.731, 906.733, 906.735) 05/2016-12/2018

314 CDI 4x4 (906.731, 906.733, 906.735) 05/2016-12/2018

311 CDI (906.731, 906.733, 906.735) 05/2016-12/2018

314 CDI 4x4 (906.731, 906.733, 906.735) 05/2016-12/2018

314 CDI (906.731, 906.733, 906.735) 05/2016-12/2018

314 CDI (906.731, 906.733, 906.735) 05/2016-12/2018

313 CDI (906.731, 906.733, 906.735) 08/2011-12/2016

313 CDI 4x4 (906.731, 906.733, 906.735) 08/2011-12/2016

313 CDI (906.731, 906.733, 906.735) 08/2011-12/2016

313 CDI 4x4 (906.731, 906.733, 906.735) 08/2011-12/2016

313 CDI 4x4 (906.731, 906.733, 906.735) 08/2011-12/2016

313 CDI (906.731, 906.733, 906.735) 08/2011-12/2016

310 CDI (906.731, 906.733, 906.735) 03/2009-12/2016

310 CDI (906.731, 906.733, 906.735) 03/2009-12/2016

SLK (R172)

250 CDI / d (172.403) 01/2012

E-CLASS Coupe (C207)

E 250 CDI / BlueTEC / d (207.303, 207.304) 01/2009-12/2016

E 220 CDI / d (207.302, 207.301) 01/2010-12/2016

E 220 CDI (207.302) 02/2010-12/2014

SPRINTER 3-t Van (B906)

216 CDI (906.611, 906.613) 03/2009-12/2018

213 CDI (906.611, 906.613) 06/2006-12/2016

213 CDI (906.611, 906.613) 06/2006-12/2016

216 CDI (906.611, 906.613) 03/2009-12/2018

213 CDI (906.611, 906.613) 06/2006-12/2016

216 CDI (906.611, 906.613) 03/2009-12/2018

211 CDI (906.611, 906.613) 04/2016-12/2018

214 CDI (906.611, 906.613) 04/2016-12/2018

211 CDI (906.611, 906.613) 04/2016-12/2018

214 CDI (906.611, 906.613) 04/2016-12/2018

210 CDI (906.611, 906.613) 03/2009-12/2016

210 CDI (906.611, 906.613) 03/2009-12/2016

SPRINTER 3,5-t Platform/Chassis (B906)

316 CDI (906.131, 906.133, 906.135, 906.231, 906.233,... 03/2009-12/2018

316 CDI (906.131, 906.133, 906.135, 906.231, 906.233,... 03/2009-12/2018

316 CDI 4x4 (906.131, 906.133, 906.135, 906.231, 906.233... 03/2009-12/2018

316 CDI 4x4 (906.131, 906.133, 906.135, 906.231, 906.233... 03/2009-12/2018

316 CDI 4x4 (906.131, 906.133, 906.135, 906.231, 906.233... 03/2009-12/2018

316 CDI (906.131, 906.133, 906.135, 906.231, 906.233,... 03/2009-12/2018

311 CDI (906.131, 906.133, 906.135, 906.231, 906.233,... 05/2016-12/2018

314 CDI (906.131, 906.133, 906.135, 906.231, 906.233,... 04/2016-12/2018

314 CDI (906.131, 906.133, 906.135, 906.231, 906.233,... 04/2016-12/2018

314 CDI 4x4 (906.131, 906.133, 906.135, 906.231, 906.233... 05/2016-12/2018

311 CDI (906.131, 906.133, 906.135, 906.231, 906.233,... 05/2016-12/2018

314 CDI 4x4 (906.131, 906.133, 906.135, 906.231, 906.233... 05/2016-12/2018

313 CDI 4x4 (906.131, 906.133, 906.135, 906.231, 906.233... 06/2006-12/2016

313 CDI 4x4 (906.131, 906.133, 906.135, 906.231, 906.233... 06/2006-12/2016

313 CDI 4x4 (906.131, 906.133, 906.135, 906.231, 906.233... 06/2006-12/2016

313 CDI (906.131, 906.133, 906.135, 906.231, 906.233,... 06/2006-12/2016

310 CDI (906.131, 906.133, 906.135, 906.231, 906.233,... 03/2009-12/2016

310 CDI (906.131, 906.133, 906.135, 906.231, 906.233,... 03/2009-12/2016

313 CDI (906.131, 906.133, 906.135, 906.231, 906.233,... 06/2006-12/2016

313 CDI (906.131, 906.133, 906.135, 906.231, 906.233,... 06/2006-12/2016

SPRINTER 4,6-t Van (B906)

416 CDI (906.653, 906.655, 906.657, 906.633, 906.635,... 03/2009-12/2018

416 CDI (906.653, 906.655, 906.657, 906.633, 906.635,... 03/2009-12/2018

416 CDI (906.653, 906.655, 906.657, 906.633, 906.635,... 03/2009-12/2018

414 CDI 4x4 (906.653, 906.655, 906.657) 05/2016-12/2018

414 CDI 4x4 (906.653, 906.655, 906.657) 05/2016-12/2018

414 CDI (906.653, 906.655, 906.657) 05/2016-12/2018

414 CDI (906.653, 906.655, 906.657) 05/2016-12/2018

416 CDI 4x4 (906.655, 906.657) 11/2013-12/2018

416 CDI 4x4 (906.655, 906.657) 11/2013-12/2018

411 CDI (906.653, 906.655, 906.657) 04/2016-12/2018

411 CDI (906.653, 906.655, 906.657) 04/2016-12/2018

416 CDI 4x4 (906.655, 906.657) 11/2013-12/2018

413 CDI (906.653, 906.655, 906.657) 06/2006-12/2016

413 CDI (906.653, 906.655, 906.657) 06/2006-12/2016

413 CDI (906.653, 906.655, 906.657) 06/2006-12/2016

GLK-CLASS (X204)

220 CDI 4-matic (204.984) 12/2008-06/2015

250 CDI 4-matic (204.982, 204.904) 09/2009-06/2015

200 CDI (204.901) 07/2010-06/2015

200 CDI (204.901) 07/2010-06/2015

220 CDI (204.902) 12/2008-06/2015

220 CDI 4-matic (204.984, 204.997) 12/2008-06/2015

200 CDI (204.901) 12/2013-06/2015

SPRINTER 4,6-t Platform/Chassis (B906)

416 CDI (906.153, 906.155, 906.253, 906.255) 03/2009-12/2018

416 CDI (906.153, 906.155, 906.253, 906.255) 03/2009-12/2018

416 CDI (906.153, 906.155, 906.253, 906.255) 03/2009-12/2018

414 CDI (906.153, 906.155, 906.253, 906.255) 05/2016-12/2018

414 CDI (906.153, 906.155, 906.253, 906.255) 05/2016-12/2018

411 CDI (906.153, 906.155, 906.253, 906.255) 04/2016-12/2018

411 CDI (906.153, 906.155, 906.253, 906.255) 04/2016-12/2018

413 CDI (906.153, 906.155, 906.253, 906.255) 06/2006-12/2016

413 CDI (906.153, 906.155, 906.253, 906.255) 06/2006-12/2016

413 CDI (906.153, 906.155, 906.253, 906.255) 06/2006-12/2016

SPRINTER 5-t Van (B906)

516 CDI 4x4 (906.653, 906.655, 906.657) 03/2009-12/2018

516 CDI (906.653, 906.655, 906.657) 03/2009-12/2018

516 CDI 4x4 (906.653, 906.655, 906.657) 03/2009-12/2018

516 CDI (906.653, 906.655, 906.657) 03/2009-12/2018

516 CDI 4x4 (906.653, 906.655, 906.657) 03/2009-12/2018

516 CDI (906.653, 906.655, 906.657) 03/2009-12/2018

514 CDI 4x4 (906.653, 906.655, 906.657) 05/2016-12/2018

514 CDI (906.653, 906.655, 906.657) 05/2016-12/2018

514 CDI (906.653, 906.655, 906.657) 05/2016-12/2018

511 CDI (906.653, 906.655, 906.657) 05/2016-12/2018

511 CDI (906.653, 906.655, 906.657) 05/2016-12/2018

514 CDI 4x4 (906.653, 906.655, 906.657) 05/2016-12/2018

510 CDI (906.653, 906.655, 906.657) 03/2009-12/2016

513 CDI (906.653, 906.655, 906.657) 06/2006-12/2016

513 CDI 4x4 (906.653, 906.655, 906.657) 03/2009-12/2016

513 CDI 4x4 (906.653, 906.655, 906.657) 03/2009-12/2016

513 CDI (906.653, 906.655, 906.657) 06/2006-12/2016

510 CDI (906.653, 906.655, 906.657) 03/2009-12/2016

513 CDI (906.653, 906.655, 906.657) 03/2009-05/2016

513 CDI 4x4 (906.653, 906.655, 906.657) 03/2009-12/2016

513 CDI (906.653, 906.655, 906.657) 06/2006-12/2016

SPRINTER 3-t Bus (B906)

216 CDI (906.711, 906.713) 06/2009-12/2018

216 CDI (906.711, 906.713) 06/2009-12/2018

216 CDI (906.711, 906.713) 06/2009-12/2018

214 CDI (906.711, 906.713) 04/2016-12/2018

211 CDI (906.711, 906.713) 04/2016-12/2018

211 CDI (906.711, 906.713) 04/2016-12/2018

214 CDI (906.711, 906.713) 04/2016-12/2018

210 CDI (906.711, 906.713) 03/2009-12/2016

210 CDI (906.711, 906.713) 03/2009-12/2016

213 CDI (906.711, 906.713) 06/2006-12/2016

213 CDI (906.711, 906.713) 06/2006-12/2016

213 CDI (906.711, 906.713) 06/2006-12/2016

SPRINTER 3,5-t Van (B906)

316 CDI 4x4 (906.631, 906.633, 906.635, 906.637) 03/2009-12/2018

316 CDI 4x4 (906.631, 906.633, 906.635, 906.637) 03/2009-12/2018

316 CDI (906.631, 906.633, 906.635, 906.637) 03/2009-12/2018

316 CDI (906.631, 906.633, 906.635, 906.637) 03/2009-12/2018

316 CDI 4x4 (906.631, 906.633, 906.635, 906.637) 03/2009-12/2018

316 CDI (906.631, 906.633, 906.635, 906.637) 03/2009-12/2018

311 CDI (906.631, 906.633, 906.635, 906.637) 05/2016-12/2018

311 CDI (906.631, 906.633, 906.635, 906.637) 05/2016-12/2018

314 CDI 4x4 (906.631, 906.633, 906.635, 906.637) 05/2016-12/2018

314 CDI 4x4 (906.631, 906.633, 906.635, 906.637) 05/2016-12/2018

314 CDI (906.631, 906.633, 906.635, 906.637) 05/2016-12/2018

314 CDI (906.631, 906.633, 906.635, 906.637) 05/2016-12/2018

313 CDI (906.631, 906.633, 906.635, 906.637) 05/2009-12/2016

313 CDI (906.631, 906.633, 906.635, 906.637) 05/2009-12/2016

313 CDI 4x4 (906.631, 906.633, 906.635, 906.637) 03/2009-12/2016

313 CDI (906.631, 906.633, 906.635, 906.637) 05/2009-12/2016

313 CDI (906.631, 906.633, 906.635, 906.637) 05/2009-12/2016

313 CDI 4x4 (906.631, 906.633, 906.635, 906.637) 03/2009-12/2016

313 CDI 4x4 (906.631, 906.633, 906.635, 906.637) 03/2009-12/2016

310 CDI (906.631, 906.633, 906.635, 906.637) 03/2009-12/2016

310 CDI (906.631, 906.633, 906.635, 906.637) 03/2009-12/2016

E-CLASS Convertible (A207)

E 250 CDI / BlueTEC / d (207.403, 207.404) 01/2010-12/2016

E 220 CDI / BlueTEC / d (207.402, 207.401) 01/2010-12/2016

E 220 CDI (207.402) 02/2010-12/2016

E 220 BlueTEC (207.401) 05/2014-12/2016

CLS Shooting Brake (X218)

CLS 250 CDI / BlueTEC / d (218.903, 218.904) 10/2012-12/2017

CLS 220 BlueTEC / d (218.901) 05/2014-12/2017

CLS 250 BlueTEC / d 4-matic (218.997) 05/2014-12/2017

VITO Mixto (Double Cabin) (W447)

119 BlueTEC 4-matic (447.701, 447.703, 447.705) 12/2014

119 BlueTEC (447.701, 447.703, 447.705) 10/2014

114 CDI 4-matic (447.701, 447.703, 447.705) 07/2015

114 CDI (447.701, 447.703, 447.705) 10/2014

116 CDI 4-matic (447.701, 447.703, 447.705) 07/2015

116 CDI (447.701, 447.703, 447.705) 10/2014

VITO Van (W447)

114 CDI 4x4 (447.601, 447.603, 447.605) 07/2015

119 CDI / BlueTEC (447.601, 447.603, 447.605) 10/2014

116 CDI (447.601, 447.603, 447.605) 10/2014

116 CDI 4x4 (447.601, 447.603, 447.605) 07/2015

114 CDI (447.601, 447.603, 447.605) 10/2014

119 CDI / BlueTEC 4x4 (447.601, 447.603, 447.605) 07/2015

V-CLASS (W447)

V 200 CDI / d (447.811, 447.813, 447.815) 03/2014

V 220 CDI / d 4-matic (447.811, 447.813, 447.815) 03/2015

V 220 CDI / d (447.811, 447.813, 447.815) 03/2014

V 250 BlueTEC / d 4-matic (447.811, 447.813, 447.815) 12/2014

V 250 BlueTEC / d (447.811, 447.813, 447.815) 03/2014

V 200 CDI / d 4-matic (447.811, 447.813, 447.815) 04/2015

VITO Tourer (W447)

114 CDI / 114 BlueTEC (447.701, 447.703, 447.705) 10/2014

114 CDI / 114 BlueTEC 4-matic (447.701, 447.703,... 07/2015

119 CDI / 119 BlueTEC 4-matic (447.701, 447.703,... 12/2014

116 CDI / 116 BlueTEC (447.701, 447.703, 447.705) 10/2014

116 CDI / 116 BlueTEC 4-matic (447.701, 447.703,... 07/2015

119 CDI / 119 BlueTEC (447.701, 447.703, 447.705) 10/2014

SPRINTER 5-t Bus (B906)

516 CDI (906.655, 906.657) 03/2009-12/2018

516 CDI (906.655, 906.657) 03/2009-12/2018

513 CDI (906.655, 906.657) 03/2009-12/2016

SPRINTER 5-t Platform/Chassis (B906)

511 CDI (906.153, 906.155, 906.253, 906.255) 05/2016-12/2018

514 CDI 4x4 (906.153, 906.155, 906.253, 906.255) 05/2016-12/2018

514 CDI (906.153, 906.155, 906.253, 906.255) 05/2016-12/2018

514 CDI 4x4 (906.153, 906.155, 906.253, 906.255) 05/2016-12/2018

514 CDI (906.153, 906.155, 906.253, 906.255) 05/2016-12/2018

511 CDI (906.153, 906.155, 906.253, 906.255) 05/2016-12/2018

513 CDI 4x4 (906.155, 906.253, 906.255, 906.153) 05/2011-12/2016

513 CDI 4x4 (906.155, 906.253, 906.255, 906.153) 05/2011-12/2016

513 CDI 4x4 (906.155, 906.253, 906.255, 906.153) 05/2011-12/2016

516 CDI 4x4 (906.153, 906.155, 906.255, 906.253) 03/2009-12/2018

516 CDI 4x4 (906.153, 906.155, 906.255, 906.253) 03/2009-12/2018

516 CDI 4x4 (906.153, 906.155, 906.255, 906.253) 03/2009-12/2018

516 CDI (906.153, 906.155, 906.253, 906.255) 03/2009-12/2018

516 CDI (906.153, 906.155, 906.253, 906.255) 03/2009-12/2018

513 CDI (906.155, 906.253, 906.255, 906.153) 06/2006-12/2016

513 CDI (906.155, 906.253, 906.255, 906.153) 06/2006-12/2016

516 CDI (906.153, 906.155, 906.253, 906.255) 03/2009-12/2018

510 CDI (906.153, 906.155, 906.253, 906.255) 03/2009-12/2016

513 CDI (906.155, 906.253, 906.255) 03/2009-05/2016

513 CDI (906.155, 906.253, 906.255, 906.153) 06/2006-12/2016

510 CDI (906.153, 906.155, 906.253, 906.255) 03/2009-12/2016

SPRINTER 3-t Platform/Chassis (B906)

214 CDI (906.111, 906.113, 906.211, 906.213) 04/2016-12/2018

211 CDI (906.111, 906.113, 906.211, 906.213) 04/2016-12/2018

214 CDI (906.111, 906.113, 906.211, 906.213) 04/2016-12/2018

211 CDI (906.111, 906.113, 906.211, 906.213) 04/2016-12/2018

210 CDI (906.111, 906.113, 906.211, 906.213) 03/2009-12/2016

213 CDI (906.111, 906.113, 906.211, 906.213) 03/2009-12/2016

210 CDI (906.111, 906.113, 906.211, 906.213) 03/2009-12/2016

216 CDI (906.111, 906.113, 906.211, 906.213) 03/2009-12/2018

216 CDI (906.111, 906.113, 906.211, 906.213) 03/2009-12/2018

213 CDI (906.111, 906.113, 906.211, 906.213) 03/2009-12/2016

213 CDI (906.111, 906.113, 906.211, 906.213) 03/2009-12/2016

216 CDI (906.111, 906.113, 906.211, 906.213) 03/2009-12/2018

SLC (R172)

250 d (172.404) 01/2016-10/2017

MARCO POLO Camper (W447)

200 CDI (447.703, 447.813) 03/2015

220 CDI 4-matic (447.703, 447.813) 03/2015

250 CDI (447.703, 447.813) 03/2015

250 CDI 4-matic (447.703, 447.813) 03/2015

200 CDI 4-matic (447.703, 447.813) 03/2015

220 CDI (447.703, 447.813) 03/2015

SPRINTER 4-t Tourer Bus (B907)

414 CDI (907.741, 907.743, 907.745) 09/2019-12/2021

411 CDI (907.741, 907.743, 907.745) 02/2018-12/2021

SPRINTER 3-t Platform/Chassis (B910, B907)

211 CDI RWD (907.221, 907.223) 02/2018-12/2021

214 CDI RWD (907.221, 907.223) 02/2018-12/2021

216 CDI RWD (907.221, 907.223) 02/2018-12/2021