SINTLY

SINTLY | STARTER MOTOR

XTLSTR4141

VOLTAGE 12 V

POWER 2.50 kW

APPLICATIONS CITROËN, DS, FIAT, LANCIA, MITSUBISHI, OPEL, PEUGEOT, TOYOTA

DIMENSIONS

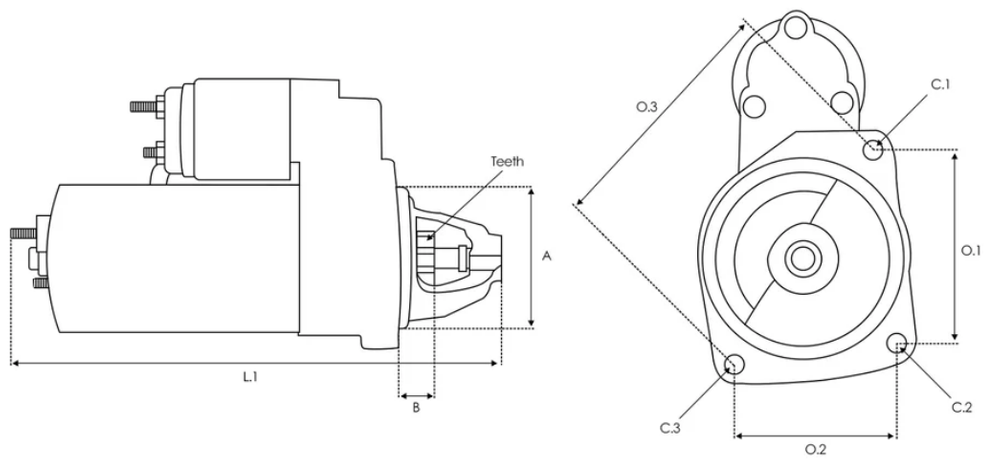

B -5.00 mm Teeth 11 qty. L.1 239.00 mm O.1 18.00 mm O.2 120.00 mm O.3 29.00 mm C.1 M10x1.5 mm C.2 M10x1.5 mm C.3 M10x1.5 mm

OE Numbers

Other	438200

Equivalent Code

3EFFE	STRL875
AINDE	CGB-23077

ANDEL	ANM12407X
APEC	ASM1726
AS-PL	S3089
AUTO MAGNETO	AM-2456
AUTOELECTRO	AEY2226
BOSCH	0986023850
CASCO	CST15117GS
CEVAM	3104
DELCO	DRS0187
EAI	12078
ELECTROLOG	STR00126
ELSTOCK	25-3399
ERA	220533
FRIESEN	8080281
HC PARTS	CS1416
HERTH+BUSS	42023850

KUHNER	101416 101416V
LOGISTIK	332268
LUCAS	LRS02226 LRS2226
MEAT & DORIA	5015124
MITSUBISHI	1810A111
NAPA	NPANSM1726
OPEL	1638126880 3553141 95527511
PEUGEOT	5802-AV 5802AT 5802AW 5802CA 9654561480 9654595680
POWERMAX	8212584 88212584
REAL	20479711OE
RNL	RNLD8R28
SANDO	6015117 6015117.0 6015117.1
SIDAT	S12VA0114 S12VA0114A2
SOVEREIGN	SS574
STARDAX	STX201054

STARLINE	SX 2279
TOYOTA	SU001-A2690
VALEO	192943 D8R28
WAI	220.526.113.000 220.526.113.008 220.526.113.500 33226N 33226N-OE 33226R S131.948 S144.548
WOODAUTO	STR54143

Applications

PEUGEOT

508 SW I (8E_)

2.2 HDi	11/2010-12/2018	2.0 BlueHDi 180	04/2014-12/2018
2.0 HDi	11/2010-12/2018	2.0 HDi	11/2010-12/2018
2.0 HDi	11/2010-12/2018	2.0 HDi	11/2010-12/2018
2.0 HDi	11/2010-12/2018	2.0 HDi	11/2010-12/2018
2.0 HDi	11/2010-12/2018	2.0 HDi 180 RXH	10/2014-12/2018

508 I (8D_)

2.2 HDi	11/2010-12/2018	2.0 BlueHDi 180	04/2014-12/2018
2.0 HDi	11/2010-12/2018	2.0 HDi	11/2010-12/2018
2.0 HDi	11/2010-12/2018	2.0 HDi	11/2010-12/2018
2.0 HDi	11/2010-12/2018	2.0 HDi	11/2010-12/2018

2.0 HDi 11/2010-12/2018 2.0 HDi Hybrid4 AWC 11/2010-12/2018

2.0 BlueHDi 150 04/2014-12/2018

308 II (LB_, LP_, LW_, LH_, L3_)

2.0 GT BlueHDi 180 06/2017-06/2021 2.0 BlueHDi 150 11/2013-06/2021

2.0 GT BlueHDi 180 06/2014-06/2021 2.0 BlueHDi 150 11/2013-06/2021

308 SW II (LC_, LJ_, LR_, LX_, L4_)

2.0 GT BlueHDi 180 06/2017-06/2021 2.0 BlueHDi 150 03/2014-06/2021

2.0 BlueHDi 150 03/2014-06/2021

2.0 GT HDi 180 / BlueHDi 180 06/2014-06/2021

508 SW Estate Van (8E_)

2.2 HDi 11/2011

EXPERT Platform/Chassis (V_)

2.0 BlueHDi 145 01/2023 2.0 BlueHDi 120 09/2016

2.0 BlueHDi 150 09/2016

EXPERT Bus (V_)

2.0 BlueHDi 145 07/2021 2.0 BlueHDi 180 04/2016

2.0 BlueHDi 150 04/2016 2.0 BlueHDi 180 04/2016

2.0 BlueHDi 120 09/2019

TRAVELLER Bus (V_)

2.0 BlueHDi 145 09/2020 2.0 BlueHDi 145 09/2020

2.0 BlueHDi 150 / HDi 150 4x4 04/2016 2.0 BlueHDi 180 04/2016

2.0 BlueHDi 150 / HDi 150 04/2016 2.0 BlueHDi 180 04/2016

2.0 BlueHDi 120 09/2019

5008 I Van (0U_)

HDi 165 (0URHHT) 06/2009-03/2017

EXPERT Van (V_)

2.0 BlueHDi 145 08/2021

2.0 BlueHDi 145 08/2021

2.0 BlueHDi 180 04/2016

2.0 BlueHDi 120 04/2016

2.0 BlueHDi 180 04/2016

2.0 BlueHDi 150 04/2016

2.0 BlueHDi 120 4x4 04/2016

2.0 BlueHDi 150 4x4 04/2016

3008 I MPV (0U_)

2.0 HDi 150 / BlueHDi 150 06/2009-08/2016

2.0 HDi 150 / BlueHDi 150 06/2009-08/2016

2.0 HDi 06/2009-08/2016

1.6 HDi 06/2009-08/2016

308 SW I (4E_, 4H_)

2.0 HDi 04/2011-10/2014

2.0 HDi 09/2007-12/2012

2.0 HDi 06/2009-10/2014

2.0 HDi 09/2007-10/2014

308 I (4A_, 4C_)

2.0 HDi 04/2012-10/2014

2.0 HDi 09/2007-10/2014

2.0 HDi 09/2007-10/2014

2.0 HDi 07/2010-12/2012

2.0 HDi 10/2011-10/2014

308 CC (4B_)

2.0 HDi 06/2009-12/2014

2.0 HDi 04/2009-12/2012

2.0 HDi (4BRHRH, 4BRHRJ) 04/2009-12/2014

2.0 HDi (4BRHRH, 4BRHRJ) 04/2009-12/2014

508 II (FB_, FH_, F3_)

2.0 BlueHDI 160 (FHEHYR) 10/2018

2.0 BlueHDI 180 (FHEHZR, FHEHZN) 10/2018

508 SW II (FC_, FJ_, F4_)

2.0 BlueHDi 160 09/2018 2.0 BlueHDi 180 09/2018

3008 II SUV (MC_, MR_, MJ_, M4_)

2.0 BlueHDi 180 01/2018

2.0 BlueHDi 150 (MJAHXH, MJAHXV, MJAHXG, MJAHSH, MJAHRH, 05/2016-09/2020

2.0 BlueHDi 150 (MJAHXH, MJAHXV, MJAHXG, MJAHSH, MJAHRH, 05/2016-09/2020

2.0 BlueHDi 150 (MJAHXH, MJAHXV, MJAHXG, MJAHSH, MJAHRH, 05/2016-09/2020

2.0 BlueHDi 180 05/2016 2.0 BlueHDi 136 11/2016

5008 II (MC_, MJ_, MR_, M4_)

2.0 BlueHDi 136 (MJAHVW) 12/2016 2.0 BlueHDi 136 (MJAHVW) 12/2016

2.0 BlueHDi 180 (MJAHWW) 12/2016

2.0 BlueHDi 150 (MJAHXW, MJAHXH, MJAHXN, MJAHXV, MJAHXG) 12/2016

2.0 BlueHDi 180 (MJEHZW, MJEHZR, MJEHZP) 01/2018

3008 Van (MR_, MC_, MJ_)

BlueHDi 180 (MJEHZR) 01/2018

3008 Van (0U_)

HDi (0URHHT) 06/2009-08/2016

5008 II Van (MC_, MJ_)

BlueHDi 180 (MJEHZW) 01/2018

407 (6D_)

2.0 HDi (6DRHHA) 06/2009-12/2010 2.2 HDi 170 (6D4HTH) 03/2006-12/2010

2.2 HDi 170 (6D4HTH) 03/2006-12/2010 2.2 HDi (6D4HPH) 03/2006-12/2010

2.0 HDi 135 (6DRHRH, 6DRHRE, 6DRHRG, 6DRHRJ) 05/2004-10/2010

2.0 HDi (6DRHRH) 06/2009-12/2010

2.0 HDi (6DRHLG, 6DRHLE) 11/2004-10/2007

807 (EB_)

2.0 HDi 06/2009 2.2 HDi 06/2006-06/2010 2.2 HDi 06/2006-06/2010

2.2 HDi 06/2006 2.2 HDi 06/2006 2.0 HDI 06/2006 2.0 HDI 06/2006

2.0 HDI 06/2006

5008 (0U_, 0E_)

2.0 HDi 136 / BlueHDi 136 02/2012-03/2017

2.0 HDi 136 / BlueHDi 136 02/2012-03/2017

2.0 HDi 136 / BlueHDi 136 02/2012-03/2017 2.0 HDi 09/2009-03/2017

2.0 HDi 150 / BlueHDi 150 06/2009-03/2017

2.0 HDi 150 / BlueHDi 150 06/2009-03/2017

407 SW (6E_, 6D_)

2.2 HDi 170 03/2006-12/2010 2.2 HDi 170 03/2006-12/2010

2.2 HDi 06/2008-12/2010 2.0 HDi 06/2009-12/2010

2.0 HDi 135 07/2004-12/2010 2.0 HDi 08/2008-12/2010

2.0 HDi 11/2004-10/2007

607 (9D, 9U)

2.2 HDi 05/2006-06/2010 2.0 HDI 09/2005-07/2011

2.2 HDi 05/2006-06/2010

4007 (VU_, VV_)

2.2 HDi 02/2007-03/2013 2.2 HDi 02/2007-03/2013

407 Coupe (6C_)

2.0 HDi 06/2009 2.0 HDi 10/2005

EXPERT TEPEE (VF3X_)

2.0 HDi 165 09/2009

EXPERT Van (VF3A_, VF3U_, VF3X_)

2.0 HDi 165 09/2009

308 SW I Estate Van (4E_)

2.0 HDi 01/2008-12/2011

EXPERT Platform/Chassis

2.0 HDi 165 09/2009

4007 Van (VU_, VV_)

HDi 155 (VU4HNH, VV4HK8) 02/2007-03/2013

HDi 155 (VU4HNH, VV4HK8) 02/2007-03/2013

307 CC (3B)

2.0 HDi 135 06/2005-04/2009

307 (3A/C)

2.0 HDi 135 10/2003-11/2007

307 SW (3H)

2.0 HDi 135 02/2004-04/2008

307 Break (3E)

2.0 HDi 135 02/2004-04/2008

407 SW Estate Van (6E_)

2.0 HDi 06/2009-12/2010

307 SW Estate Van (3E_, 3H_)

2.0 HDi 04/2004-11/2007

CITROËN

DS5

2.0 BlueHDi 180 08/2013-07/2015

2.0 HDi 165 11/2011-07/2015

2.0 HDi 200 Hybrid4 All-wheel Drive 12/2011-07/2015

2.0 BlueHDi 150 07/2014-07/2015

2.0 HDi 135 11/2011-07/2015

SPACETOURER Bus (V_)

2.0 BlueHDi 180 04/2016

2.0 BlueHDi 180 04/2016

2.0 BlueHDi 145 09/2020

2.0 BlueHDi 145 09/2020

2.0 BlueHDi 120 12/2019

2.0 BlueHDi 150 4x4 04/2016

2.0 BlueHDi 150 04/2016

C5 AIRCROSS (A_)

2.0 BlueHDi 180 (AJEHZR) 11/2018

C4 SPACETOURER (3D_)

2.0 BlueHDi 160 04/2018

2.0 BlueHDi 150 04/2018

GRAND C4 SPACETOURER (3A_, 3E_)

2.0 BlueHDi 160 04/2018

2.0 BlueHDi 150 04/2018

2.0 BlueHDi 150 04/2018

JUMPY III Van (V_)

2.0 BlueHDi 145 4x4 01/2022

2.0 BlueHDi 145 08/2021

2.0 BlueHDi 145 08/2021 2.0 BlueHDi 180 04/2016

2.0 BlueHDi 150 04/2016 2.0 BlueHDi 120 04/2016

2.0 BlueHDi 180 04/2016 2.0 BlueHDi 150 4x4 04/2016

2.0 BlueHDi 120 4x4 04/2016

JUMPY III Platform/Chassis (V_)

2.0 BlueHDi 145 01/2023 2.0 BlueHDi 120 09/2016

2.0 BlueHDi 150 09/2016

C5 III Break (RW_)

2.2 HDi 200 07/2010-06/2015

2.0 HDi 150 / BlueHDi 150 (RWRHEJ, RWRHE8) 04/2009-05/2017

2.0 HDi 165 04/2009-07/2016 2.2 HDi 165 02/2008-08/2009

2.0 HDi 150 / BlueHDi 150 (RWRHEJ, RWRHE8) 04/2009-05/2017

2.0 HDi 180 03/2015-05/2017 2.0 HDi 02/2008-06/2014

2.0 HDi 02/2008-06/2014 2.2 HDi (RW4HTH) 02/2008-12/2011

2.0 HDi 140 04/2009-06/2015 2.0 HDi 140 04/2009-06/2015

C5 III (RD_)

2.2 HDi 200 (RD4HLA) 07/2010-06/2015

2.2 HDi (RD4HTH, RD4HPH, RD4HRH, RD4HSH) 04/2009-12/2011

2.2 HDi (RD4HTH, RD4HPH, RD4HRH, RD4HSH) 04/2009-12/2011

2.0 HDi 165 (RDRHHA, RDRHH8) 04/2009-07/2016

2.0 HDi 150 / BlueHDi 150 (RDRHEA, RDRHE8, RDAHRM,... 04/2009-05/2017

2.0 HDi 150 / BlueHDi 150 (RDRHEA, RDRHE8, RDAHRM,... 04/2009-05/2017

2.0 HDi 150 / BlueHDi 150 (RDRHEA, RDRHE8, RDAHRM,... 04/2009-05/2017

2.0 HDi 180 (RDAHWT) 03/2015-05/2017

2.0 HDi (RDRHD8, RDRHDJ, RDRHR8, RDRHRJ) 02/2008-06/2014

2.0 HDi (RDRHD8, RDRHDJ, RDRHR8, RDRHRJ) 02/2008-06/2014

2.2 HDi (RD4HTH) 02/2008-12/2011

2.0 HDi (RDRHD8, RDRHDJ, RDRHR8, RDRHRJ) 02/2008-06/2014

2.0 HDi 140 (RDRHF8, RDRHFA, RDRHA8, RDRHAJ) 11/2008-06/2015

2.0 HDi 140 (RDRHF8, RDRHFA, RDRHA8, RDRHAJ) 11/2008-06/2015

C6 (TD_)

2.2 HDi 06/2006-12/2012

2.2 HDi 06/2006-12/2012

2.2 HDi 06/2006-12/2010

JUMPY III Bus (V_)

2.0 BlueHDi 180 04/2016

2.0 BlueHDi 150 04/2016

2.0 BlueHDi 120 12/2019

JUMPY II Platform/Chassis

2.0 HDI (X_RHH) 07/2010-03/2016

C4 PICASSO II Van (DD_)

BlueHDi 150 (DDAHXT) 09/2013

C4 II (NC_)

2.0 HDi / BlueHDi 150 11/2009

2.0 HDi / BlueHDi 150 11/2009

2.0 HDi / BlueHDi 160 10/2010

C4 GRAND PICASSO I (UA_)

2.0 HDi 165 09/2010-08/2013

2.0 HDi 138 10/2006-12/2013

2.0 HDi 138 10/2006-12/2013

2.0 HDi 150 07/2009-08/2013

DS4 (NX_)

2.0 HDi 165 04/2011-07/2015
2.0 HDi / BlueHDi 135 09/2011-07/2015
2.0 HDi / BlueHDi 135 09/2011-07/2015
2.0 BlueHDi 180 07/2014-07/2015
2.0 HDi / BlueHDi 135 09/2011-07/2015
2.0 BlueHDi 150 07/2014-07/2015
2.0 HDi / BlueHDi 135 09/2011-07/2015

C4 PICASSO I MPV (UD_)

2.0 HDi 165 09/2010-08/2013
2.0 HDi 150 07/2009-08/2013
2.0 HDi 138 10/2006-08/2013
2.0 HDi 138 10/2006-08/2013

C8 (EA_, EB_)

2.2 HDi 06/2006-12/2012
2.2 HDi 06/2006-12/2012
2.2 HDi 06/2007
2.2 HDi 06/2007
2.0 HDi 07/2006
2.0 HDi 135 03/2006
2.0 HDi 135 03/2006
2.0 HDi 135 03/2006

C-CROSSER (VU_, VV_)

2.2 HDi 02/2007-12/2012
2.2 HDi 02/2007-12/2012

C4 GRAND PICASSO II (DA_, DE_)

2.0 BlueHDi 150 06/2013
2.0 BlueHDi 150 06/2013
2.0 BlueHDi 135 09/2013
2.0 BlueHDi 135 09/2013

C4 PICASSO II

2.0 BlueHDi 150 09/2013
2.0 BlueHDi 150 09/2013
2.0 BlueHDi 150 09/2013
2.0 BlueHDi 135 09/2013
2.0 BlueHDi 135 09/2013

JUMPY II Van

2.0 HDi 165 07/2010-03/2016

C4 I Hatchback Van (LR_)

2.0 HDi 02/2005-12/2010

C-CROSSER Van (VU_)

2.2 HDi (VU4HNH) 06/2007-12/2012

GRAND C4 SPACETOURER Van (3A_, 3E_)

BlueHDi 160 05/2019

C5 II (RC_)

2.0 HDi (RCRHRH) 09/2004-01/2008

2.2 HDi 04/2006-08/2008

2.2 HDi 05/2006-01/2008

2.2 HDi 05/2006-01/2008

C4 I (LC_)

2.0 HDi 11/2004-07/2011

2.0 HDi 07/2008-07/2011

C5 II Break (RE_)

2.0 HDi (RERHRH) 09/2004-01/2008

2.2 HDi (RE4HTE, RE4HT2) 04/2006-08/2008

2.2 HDi (RE4HPE, RE4HP2, RE4HRE, RE4HR2) 05/2006-01/2008

2.2 HDi (RE4HPE, RE4HP2, RE4HRE, RE4HR2) 05/2006-01/2008

C4 Coupe (LA_)

2.0 HDi 11/2004-12/2010

2.0 HDi 07/2008-07/2011

JUMPY II (VF7)

2.0 HDi 165 07/2010-03/2016

C5 II Estate Van (RE_)

2.0 HDi (RERHRH) 09/2004-01/2008

OPEL

GRANDLAND / GRANDLAND X (A18, P1UO)

2.0 D (75) 11/2017-07/2021 1.6 Turbo (75) 12/2019-07/2021

VIVARO C Bus (K0)

2.0 03/2019 2.0 12/2022 2.0 03/2019 2.0 09/2020 2.0 09/2020

ZAFIRA LIFE Bus (K0)

2.0 03/2019 2.0 08/2019 2.0 09/2020 2.0 09/2020

VIVARO C Van (K0)

2.0 03/2019 2.0 03/2019 2.0 08/2021 2.0 4x4 03/2019

2.0 08/2021 2.0 4x4 08/2021 2.0 03/2019

VIVARO C Platform Cabin (K0)

2.0 03/2019 2.0 04/2023 2.0 03/2019

GRANDLAND X Van

2.0 CDTI (75) 11/2017-07/2021

TOYOTA

PROACE VERSO Bus (MPY_)

2.0 D4d (MPY6, MPY5) 02/2016 2.0 D4d (MPY6, MPY5) 02/2016

2.0 D4d (MPYA) 09/2020 2.0 D4d (MPY3) 11/2019

PROACE Van (MDZ_)

2.0 D4d (MDZ6, MDZ5) 02/2016 2.0 D4d (MDZ3) 02/2016

2.0 D4d (MDZ6, MDZ5) 02/2016 2.0 D4d (MDZ3) 02/2016

2.0 D4d (MDZA) 08/2021

PROACE Bus (MDZ_)

2.0 D4d (MDZ6, MDZ5) 02/2016

2.0 D4d (MDZ6, MDZ5) 02/2016

2.0 D4d (MDZ3) 07/2019

2.0 D4d (MDZA) 09/2020

PROACE Van (MDX_)

2.0 D (MDX6) 06/2013-03/2016

DS

DS 5 (KF_)

2.0 BlueHDi 180 04/2015-12/2018

2.0 BlueHDi 150 04/2015-12/2018

2.0 BlueHDi 135 06/2015-12/2018

Hybrid4 04/2015-12/2018

DS 7 Crossback (J4_, JR_, JC_)

2.0 BlueHDi 180 (JJEHZR) 09/2017-09/2020

DS 4 / DS 4 CROSSBACK (NX_)

2.0 BlueHDi 150 07/2015-12/2018

2.0 BlueHDi 180 07/2015-12/2018

FIAT

SCUDO Van

2.0 Multijet 180 (506) 01/2022

2.0 Multijet 145 (506) 01/2022

SCUDO Bus

2.0 Multijet 180 (506) 02/2024

SCUDO Platform/Chassis

2.0 Multijet 145 (506) 01/2022

ULYSSE Bus

Multijet 180 (366) 01/2022

ULYSSE (179_)

2.2 JTD 03/2008-06/2011 2.2 JTD 03/2008-06/2011

2.2 D Multijet 03/2008-06/2011 2.2 D Multijet 03/2008-06/2011

LANCIA

PHEDRA (179_)

2.2 JTD (179.AXN1B, 179.AXQ11, 179.BXN1B, 179.BXQ11) 04/2006-11/2010

2.2 JTD (179.AXN1B, 179.AXQ11, 179.BXN1B, 179.BXQ11) 04/2006-11/2010

2.2 D Multijet (179.AXM1B, 179.AXP11, 179.BXM1B,... 03/2008-11/2010

2.2 D Multijet (179.AXM1B, 179.AXP11, 179.BXM1B,... 03/2008-11/2010

MITSUBISHI

OUTLANDER II (CW_W)

2.2 DI-D 4WD 08/2007-11/2012 2.2 DI-D 4WD 08/2007-11/2012