SINTLY

SINTLY | ALTERNATOR

XTLALT0156

VOLTAGE 12 V

OUTPUT CURRENT 150 A

APPLICATIONS For NISSAN, OPEL, RENAULT, VAUXHALL

DIMENSIONS

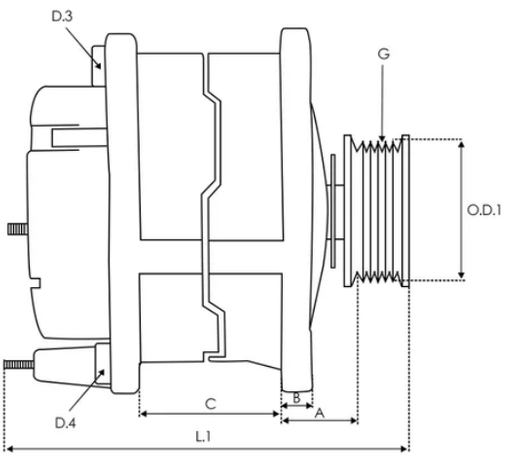

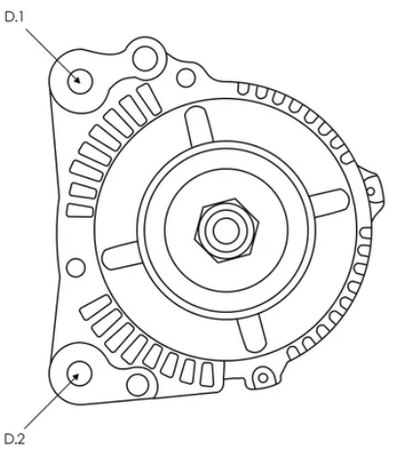

PL_2401

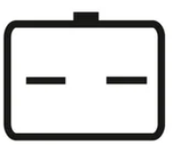

L DFM

L	Lamp
DFM	Feedback

A 32.50 mm B 14.00 mm C 61.00 mm G 7 qty. O.D.1 49.00 mm D.1 9.00 mm D.2 9.00 mm D.3 M8x1.25 mm D.4 M8x1.25 mm L.1 193.00 mm

OE 编号

BOSCH	0124525044 0124525133 0124525533 0124525541 0986046260 1986A00898
Other	0101542102 0123520002 0986039080 11135

替代编码

AS-PL	A0165
3EFFE	ALTS144 PRAS144
A.Z. MEISTERTEILE	AZMT-49-035-1204 AZMT-49-035-1210
ACAUTO	AC-CBA1827
AINDE	28-4875CT CGB-16260 CGB-16280
ALANKO	10443170
ANDEL	ANM48480 ANM48480X
AUGER	101393
AUTOELECTRO	AEK2368
AUTOTEAM	ABO300A
BORG & BECK	BBA2356 BBA2975
CARGO	113837 F032113837
CASCO	CAL10300AS CAL10300GS CAL10300RS
CEVAM	4687
DELCO	DB7370 DRB6260 RAA27371

DRI	2301981502
DT SPARE PARTS	6.27022
EAI	56888
ELECTROLOG	ALT1488 ALT1293 ALT79450
ELSTOCK	28-4875
ELTA AUTOMOTIVE	EZ4067
ERA	210719 210719A
EUROREPAR	1638099880
EUROTEC	12046260
FARCOM	111568
FAST	FT74127
FEBI BILSTEIN	101514
GHIBAUDI	AG0129
GPARTS	GA525044-A GA525044B-R SA525044-A SA525044B-R
HC PARTS	CA1827IR
HELLA	8EL011710-801

HENKEL PARTS	3122331 3122332
HOFFER	H5510018 H5510018G
IAP QUALITY PARTS	802-13165
IKA	680151
ISKRA / LETRIKA	11.209.665 AAL5126 IA9510
ITAB AUTOMOTIVE	20010300AV 20010300OV
JPN	80E1005-JPN
KRAUF	ALB1827
KUHNER	301827RI 301827RIB
LE PART	LEA0782
LOGISTIK	442059
LUCAS	LRA02368 LRA2368
MAGNETI MARELLI	063535255330 063731827010 72536204 MAN2076 MQA1827
MAHLE	MG1074 MG65
MEAT & DORIA	5510018 5510018G

NISSAN	23100-00Q2F 23100-00QAN
NK	4846260
NPS	N511N124
OPEL	4405286 4434147 9121119 93169472 93198273 95521452
POWERMAX	89212411
PRESTOLITE	A2042B
PROTECH	IR6485
PSH	575.577.150.010 575.577.150.018 575.577.150.210 575.577.150.280 575.577.150.390 A133.903 A147.499
REAL	20101003BN 20101003OE 20101003RC
REMANTE	QRA1430
RENAULT	7711135812 8200190721 8200404300 8200660035 8200692868
RHIAG	311062
RIDEX	4G0124 4G0124R
ROLLCO	ALT165
SAMPA	076.307

SANDO	2010300.0 2010300.1 2010300.2
SIDAT	A12BH0145 A12BH0145A2
SIOM	ALT123000 ALT123000A ALT123000R
SNRA	OP8078
STARDAX	STX100061R
STARK	SKGN-0320123
STARTCAR	888ST65
TESLA	TT12238 TT12238PRO
TMI	AL02461
VALEO	200162 440212 443053 443292
WAI / TRANSPO	23367N 23872R
WILMINK GROUP	WG2012189 WG2012190 WG2196781 WG2203011 WG2226264 WG2280842 WG2282940 WG2317978
WOODAUTO	ALT10516
APEC	AAL1068
AUTO MAGNETO	AM-3544

NAPA	NPANAL1068
RNL	RNL4626
WAI	23367N 23872R 575.577.150.010 575.577.150.018 575.577.150.210 575.577.150.280 575.577.150.390 A133.903 A147.499

适用车型

RENAULT

LAGUNA II Grandtour (KG0/1_)

2.0 16V (KG1Y) 01/2005-09/2007

2.0 16V (KG1Y) 01/2005-09/2007

1.9 dCi 08/2003-09/2007

2.0 16V (KG00, KG0K, KG0W, KG0P) 08/2002-12/2007

2.0 16V (KG03, KG0Z, KG0T, KG1Y) 01/2005-09/2007

2.0 16V (KG03, KG0Z, KG0T, KG1Y) 01/2005-09/2007

1.9 dCi (KG05) 03/2004-05/2005

2.0 16V (KG00, KG0K, KG0W, KG0P) 08/2002-12/2007

2.0 16V (KG00, KG0K, KG0W, KG0P) 08/2002-12/2007

2.0 16V (KG03, KG0Z, KG0T, KG1Y) 01/2005-09/2007

1.9 dCi (KG1A, KG1W, KG0G) 01/2005-12/2007

2.0 16V Turbo (KG0S, KG1L, KG03) 01/2003-08/2005

2.0 16V Turbo (KG0S, KG1L, KG03) 01/2003-08/2005

2.0 16V (KG00, KG0K, KG0W, KG0P) 08/2002-12/2007

1.9 dCi (KG1A, KG1W, KG0G) 01/2005-12/2007 1.9 dCi 09/2005-12/2007

2.0 16V (KG00, KG0K, KG0W, KG0P) 10/2004-09/2007

2.0 16V (KG00, KG0K, KG0W, KG0P) 10/2004-09/2007

2.0 16V (KG00, KG0K, KG0W, KG0P) 10/2004-09/2007

2.0 16V (KG00, KG0K, KG0W, KG0P) 10/2004-09/2007

2.0 16V IDE (KG0N) 04/2001-09/2007 2.0 16V IDE (KG0N) 04/2001-09/2007

1.9 dCi (KG1V) 05/2005-12/2007 1.9 dCi (KG1V) 05/2005-12/2007

2.2 dCi (KG0F) 10/2001-08/2006 1.9 dCi (KG0G) 03/2001-09/2007

2.2 dCi (KG0F) 10/2001-08/2006 2.2 dCi (KG0F) 10/2001-08/2006

1.9 dCi (KG0G) 03/2001-09/2007 2.2 dCi (KG0F) 10/2001-08/2006

2.2 dCi (KG0F) 10/2001-08/2006 1.9 dCi (KG0G) 03/2001-09/2007

2.2 dCi (KG0F, KG1N) 05/2005-12/2007 2.2 dCi (KG0F, KG1N) 05/2005-12/2007

2.2 dCi (KG0F, KG1N) 05/2005-12/2007 2.2 dCi (KG0F, KG1N) 05/2005-12/2007

2.2 dCi (KG09) 04/2004-10/2005

LAGUNA II (BG0/1_)

2.0 16V (BG1Y) 01/2005-09/2007 2.0 16V (BG1Y) 01/2005-09/2007

1.9 dCi (BG1A, BG1W, BG0G) 01/2005-08/2007

2.0 16V (BG00, BG0K, BG0P, BG0W) 08/2002-12/2007

2.0 16V Turbo (BG0S, BG1L, BG1M) 01/2003-03/2005

2.0 16V (BG03, BG0Z, BG0T, BG1Y) 01/2005-09/2007

1.9 dCi (BG1A, BG1W, BG0G) 01/2005-08/2007

2.0 16V (BG03, BG0Z, BG0T, BG1Y) 01/2005-09/2007

2.0 16V (BG00, BG0K, BG0P, BG0W) 08/2002-12/2007

2.0 16V (BG03, BG0Z, BG0T, BG1Y) 01/2005-09/2007

2.0 16V (BG00, BG0K, BG0P, BG0W) 08/2002-12/2007

1.9 dCi (BG05) 03/2004-05/2005

2.0 16V Turbo (BG0S, BG1L, BG1M) 01/2003-03/2005

1.9 dCi (BG1A, BG1W, BG0G) 01/2005-08/2007

2.0 16V (BG00, BG0K, BG0P, BG0W) 08/2002-12/2007

1.9 dCi (BG1A, BG1V) 05/2005-08/2007 1.9 dCi (BG1A, BG1V) 05/2005-08/2007

1.9 dCi (BG12) 09/2005-12/2007 1.9 dCi (BG12) 09/2005-12/2007

1.9 dCi (BG12) 09/2005-12/2007 1.9 dCi 09/2005-12/2007

1.9 dCi (BG08, BG0G) 03/2001-09/2007 2.2 dCi (BG0F) 10/2001-08/2006

1.9 dCi (BG08, BG0G) 03/2001-09/2007 2.2 dCi (BG0F) 10/2001-08/2006

1.9 dCi (BG08, BG0G) 03/2001-09/2007 1.9 dCi (BG08, BG0G) 03/2001-09/2007

2.2 dCi 05/2005-08/2007 2.2 dCi 05/2005-08/2007

2.2 dCi 05/2005-08/2007 2.2 dCi 05/2005-08/2007

2.2 dCi (BG09) 04/2004-10/2005

2.0 16V (BG00, BG0W, BG0K, BG0P) 08/2002-12/2006

2.0 16V (BG00, BG0W, BG0K, BG0P) 08/2002-12/2006

2.0 16V (BG00, BG0W, BG0K, BG0P) 08/2002-12/2006

2.0 16V (BG00, BG0W, BG0K, BG0P) 08/2002-12/2006

VEL SATIS (BJ0_)

2.0 Turbo 04/2005 2.0 16 V Turbo 04/2004 2.0 16 V Turbo 04/2004

2.2 dCi (BJ0M) 12/2004 2.2 dCi (BJ0M) 12/2004

2.0 16V Turbo (BJ0K) 06/2002-08/2009 2.2 dCi (BJ0E, BJ0F) 06/2002-08/2009

2.0 16V Turbo (BJ0K) 06/2002-08/2009 2.2 dCi (BJ0E, BJ0F) 06/2002-08/2009

2.2 dCi (BJ0E, BJ0F, BJ0G, BJ0H) 09/2004

2.2 dCi (BJ0E, BJ0F, BJ0G, BJ0H) 09/2004

2.2 dCi (BJ0E, BJ0F, BJ0G, BJ0H) 09/2004

2.2 dCi (BJ0E, BJ0F, BJ0G, BJ0H) 09/2004 2.2 dCi (BJ0H) 04/2004

2.2 dCi (BJ0H) 04/2004 2.2 dCi (BJ0E, BJ0F, BJ0G, BJ0H) 09/2004

2.2 dCi (BJ0E, BJ0F, BJ0G, BJ0H) 09/2004 2.2 dCi (BJ0H) 04/2004

GRAND SCÉNIC III (JZ0/1_)

1.9 dCi (JZ0J, JZ0N, JZ1K, JZ1S) 02/2009-09/2016

1.9 dCi (JZ0J, JZ0N, JZ1K, JZ1S) 02/2009-09/2016

SCÉNIC III (JZ0/1_)

1.9 dCi (JZ0J, JZ1J, JZ1K, JZ1S) 02/2009-09/2016

1.9 dCi (JZ0J, JZ1J, JZ1K, JZ1S) 02/2009-09/2016

MASTER III Van (FV)

2.3 dCi 130 RWD (FV01, FV10, FV11, FV12) 03/2012

TRAFIC II Bus (JL)

2.5 dCi 115 (JL0R, JL0V) 02/2008 2.5 dCi 145 (JL0J) 08/2006

SCÉNIC II (JM0/1_)

1.9 D 06/2006-11/2008 1.9 D 06/2006-11/2008 1.9 D 06/2006-11/2008

1.9 D 06/2006-11/2008 1.9 D 06/2006-11/2008

1.9 dCi 130 10/2005-12/2009 1.9 dCi (JM14) 05/2005-11/2008

1.9 dCi (JM15) 05/2005-11/2008 1.9 dCi (JM14) 05/2005-11/2008

1.9 dCi (JM14) 05/2005-11/2008

1.9 dCi (JM0G, JM12, JM1G, JM2C) 06/2003-05/2006

1.9 dCi (JM14) 05/2005-11/2008 1.9 dCi 06/2003-11/2008

TRAFIC II Platform/Chassis (EL)

2.5 dCi (EL0R, EL0V) 08/2007 2.5 dCi 145 (EL0J) 08/2006

TRAFIC II Van (FL)

2.5 dCi 145 (FL0J) 08/2006 2.5 dCi (FL0R, FL0V) 08/2007

MASTER II Van (FD)

2.5 dCi (FD02) 08/2006-01/2010

2.5 dCi 100 (FD0U, FD0V, FD3U, FD3V, FD8U, FD8V) 10/2003-03/2010

2.5 dCi (FD01, FD02, FD21, FD22, FD31, FD32, FD3Y, FD71,... 08/2006-01/2010

2.5 dCi (FD01, FD0Y, FD21, FD2Y, FD31, FD71, FD7Y, FD81,... 08/2006-01/2010

2.2 dCI 90 (FD0G, FD0N, FD2G, FD2N, FD3G, FD3N) 12/1997-10/2006

2.5 dCi 120 (FD0M, FD0U, FD0W, FD2M, FD2W, FD3M, FD3U,... 10/2001-09/2007

2.5 dCi 120 (FD0M, FD0U, FD0W, FD2M, FD2W, FD3M, FD3U,... 10/2001-09/2007

2.2 dCI 90 (FD0G, FD0N, FD2G, FD2N, FD3G, FD3N) 12/1997-10/2006

2.5 dCi 120 (FD0M, FD0U, FD0W, FD2M, FD2W, FD3M, FD3U,... 10/2001-09/2007

2.5 dCi 120 (FD0M, FD0U, FD0W, FD2M, FD2W, FD3M, FD3U,... 10/2001-09/2007

2.2 dCI 90 (FD0G, FD0N, FD2G, FD2N, FD3G, FD3N) 12/1997-10/2006

MEGANE II Estate (KM0/1_)

1.9 dCi 04/2004-12/2005 1.9 dCi 05/2005-07/2009

1.9 dCi 05/2005-07/2009 1.9 dCi 03/2004-02/2007

1.9 dCi 05/2005-07/2009

1.9 dCi (KMRG, KM1G, KM0G, KM2C) 08/2003-07/2009

GRAND SCÉNIC II (JM0/1_)

1.9 dCi (JM14) 04/2004-02/2008

1.9 dCi (JM14) 04/2004-02/2008

1.9 dCi (JM0G, JM12, JM1G, JM2C) 04/2004-05/2006

1.9 dCi (JM15) 05/2005-11/2008

1.9 dCi (JM14) 04/2004-02/2008

1.9 dCi (JM14) 04/2004-02/2008

1.9 dCi 05/2005-01/2009

1.9 dCi 05/2005-01/2009

1.9 dCi 05/2005-01/2009

1.9 dCi 05/2005-01/2009

1.9 dCi 05/2005-01/2009

MEGANE II Coupé-Cabriolet (EM0/1_)

1.9 dCi 05/2005-03/2009

1.9 dCi 05/2005-03/2009

1.9 dCi 05/2005-03/2009

1.9 dCi 09/2003-03/2009

1.9 dCi 09/2003-03/2009

1.9 dCi 09/2003-03/2009

1.9 dCi 09/2003-03/2009

1.9 dCi 09/2003-03/2009

1.9 dCi 05/2005-02/2007

1.9 dCi 05/2005-02/2007

MASTER II Platform/Chassis (ED/HD/UD)

2.5 dCi 100 (ED4V, ED8V, ED0U, ED0V, ED8U, HD0U, HD0V,... 10/2002-05/2010

2.5 dCi (ED01, ED0Y, ED41, ED4Y, ED81, ED8Y, ED91, ED9Y,... 08/2006-01/2010

2.5 dCi (ED01, ED02, ED41, ED42, ED81, ED82, ED91, ED92,... 08/2006-01/2011

2.5 dCi (HD02) 08/2006-01/2010

2.2 dCI 90 (ED0G, ED0N, HD0G, HD0N, HD1G, HD1N, UD0G,... 12/1997-09/2006

2.5 dCi 120 (ED0M, ED0U, ED0W, ED4M, ED8M, ED8W, HD0M,... 10/2001-05/2010

2.2 dCI 90 (ED0G, ED0N, HD0G, HD0N, HD1G, HD1N, UD0G,... 12/1997-09/2006

2.2 dCI 90 (ED0G, ED0N, HD0G, HD0N, HD1G, HD1N, UD0G,... 12/1997-09/2006

2.5 dCi 120 (ED0M, ED0U, ED0W, ED4M, ED8M, ED8W, HD0M,... 10/2001-05/2010

2.5 dCi 120 (ED0M, ED0U, ED0W, ED4M, ED8M, ED8W, HD0M,... 10/2001-05/2010

2.5 dCi 120 (ED0M, ED0U, ED0W, ED4M, ED8M, ED8W, HD0M,... 10/2001-05/2010

MEGANE II (BM0/1_, CM0/1_)

1.9 dCi 05/2005-12/2009

1.9 dCi 05/2005-12/2009

1.9 dCi 05/2005-02/2008

1.9 dCi 05/2005-12/2009

1.9 dCi 03/2004-08/2006

1.9 dCi 05/2005-12/2009

1.9 dCi 05/2005-02/2008

1.9 dCi 11/2002-02/2008

1.9 dCi 11/2002-02/2008

1.9 dCi 11/2002-02/2008

1.9 dCi 11/2002-12/2005

1.9 dCi 11/2002-02/2008

1.9 dCi 11/2002-02/2008

1.9 dCi (BM0G, CM0G) 11/2002-02/2008

MASTER II Bus (JD)

2.5 dCi 100 (JDCV, JD1W) 10/2003-01/2010

2.5 dCi (JD01, JD0Y, JD11, JD1W, JD1Y) 08/2006-01/2010

2.5 dCi (JD01, JD02, JD11, JD12, JD1W) 06/2006-01/2010

2.5 dCi (JD12) 09/2006-01/2010

2.5 dCi 120 (JD0M, JD1M, JD1W) 10/2001-12/2006

2.2 dCI 90 (JD0G, JD0N, JD1N) 12/1997-09/2006

2.5 dCi 120 (JD0M, JD1M, JD1W) 10/2001-12/2006

2.2 dCI 90 (JD0G, JD0N, JD1N) 12/1997-09/2006

2.5 dCi 120 (JD0M, JD1M, JD1W) 10/2001-12/2006

2.5 dCi 120 (JD0M, JD1M, JD1W) 10/2001-12/2006

2.2 dCI 90 (JD0G, JD0N, JD1N) 12/1997-09/2006

MEGANE II Saloon (LM0/1_)

1.9 dCi (LM14, LM1D) 05/2005 1.9 dCi (LM14, LM1D) 05/2005

1.9 dCi (LM14, LM1D) 05/2005 1.9 dCi (LM14, LM1D) 05/2005

1.9 dCi 03/2004 1.9 dCi 09/2003-12/2005

1.9 dCi (LM0G, LM1G, LM2C) 09/2003 1.9 dCi 05/2005 1.9 dCi 05/2005

MEGANE II Estate Van (KM_)

1.9 dCi (KM14) 02/2006-10/2006

OPEL

MOVANO A Bus (X70)

2.5 CDTI (JD) 08/2006 2.5 CDTI (JD) 09/2007 2.5 CDTI (JD) 08/2006

2.5 DTi (JD) 10/2003-08/2006 2.2 DTI (JD) 09/2000 2.2 DTI (JD) 09/2000

2.2 DTI (JD) 09/2000 2.5 DTI (JD) 10/2001 2.5 DTI (JD) 10/2001

2.5 DTI (JD) 10/2001 2.5 DTI (JD) 10/2001

VIVARO A Van (X83)

2.5 CDTI (F7) 08/2006-07/2014 2.5 CDTI (F7) 08/2006-03/2010

MOVANO A Van (X70)

2.5 CDTI (FD) 10/2003 2.5 CDTI (FD) 10/2003 2.5 DTi (FD) 10/2003

2.5 DTI (FD) 10/2001 2.5 DTI (FD) 10/2001 2.2 DTI (FD) 09/2000

2.5 DTI (FD) 10/2001 2.2 DTI (FD) 09/2000 2.5 DTI (FD) 10/2001

2.2 DTI (FD) 09/2000

VIVARO A Platform/Chassis (X83)

2.5 CDTI 08/2006-07/2014 2.5 CDTI 08/2006-03/2010

2.5 DTi 04/2003-03/2010

MOVANO A Platform/Chassis (X70)

2.5 CDTI (ED, HD, UD0, UD4) 08/2006
2.5 DTi (ED, HD, UD0, UD4) 10/2003
2.5 CDTI (ED, HD, UD0, UD4) 08/2006
2.5 DTI (ED, HD, UD0, UD4) 10/2001
2.5 DTI (ED, HD, UD0, UD4) 10/2001
2.5 DTI (ED, HD, UD0, UD4) 10/2001
2.5 DTI (ED, HD, UD0, UD4) 10/2001
2.2 DTI (ED, HD, UD0, UD4) 09/2000
2.2 DTI (ED, HD, UD0, UD4) 09/2000
2.2 DTI (ED, HD, UD0, UD4) 09/2000

VIVARO A Bus (X83)

2.5 CDTI (F7, J7, A07) 08/2006-07/2014

2.5 CDTI (F7, J7, A07) 08/2006-03/2010

NISSAN

INTERSTAR Platform/Chassis (X70)

dCi 150 08/2006
dCi 115 08/2003
dCi 115 08/2003
dCi 120 08/2006
dCi 115 08/2003
dCi 115 08/2003
dCi 100 02/2004
dCi 100 02/2004

INTERSTAR Van (X70)

dCi 150 09/2006
dCi 115 04/2002
dCi 115 04/2002
dCi 100 11/2003-03/2006
dCI 90 07/2002
dCi 115 04/2002
dCi 115 04/2002
dCi 100 11/2003-03/2006
dCi 100 04/2006
dCi 120 09/2006
dCi 100 04/2006

INTERSTAR Bus (X70)

dCi 150 09/2006-03/2011
dCi 115 04/2002-08/2006

dCi 115 04/2002-08/2006 dCi 115 04/2002-08/2006

dCi 115 04/2002-08/2006 dCI 90 07/2002-08/2006

dCi 100 11/2003-03/2006 dCi 100 04/2006-03/2011

dCi 100 11/2003-03/2006 dCi 120 09/2006-03/2011

PRIMASTAR Van (X83)

2.5 dCi 115 09/2008 2.5 dCi 140 07/2003 2.0 02/2003 2.0 02/2003

2.5 dCi 150 09/2006 2.0 04/2006

PRIMASTAR Bus (X83)

dCi 115 09/2008 2.0 03/2001-08/2006 2.0 03/2001-08/2006

dCi 140 07/2003 dCi 150 09/2006 2.0 04/2006

PRIMASTAR Platform/Chassis (X83)

2.5 dCi 150 04/2006

VAUXHALL

Movano

2.5 DTi 04/2004 2.5 CDTi 04/2004 2.5 DTi 04/2004