SINTLY

SINTLY | ALTERNATOR

XTLALT3028

VOLTAGE 12 V

OUTPUT CURRENT 90 A

APPLICATIONS For AUDI, SEAT, SKODA, VW

DIMENSIONS

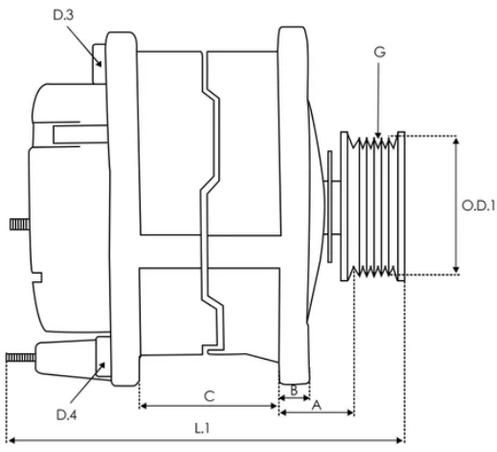

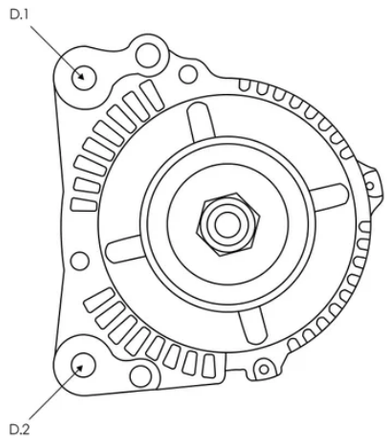

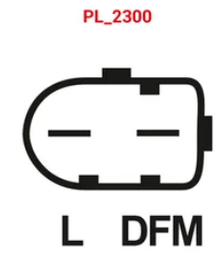

L	Lamp
DFM	Feedback

A 35.00 mm B 14.00 mm C 82.50 mm G 5 qty. O.D.1 56.00 mm D.1 9.00 mm D.2 11.00 mm D.3 M10x1.5 mm L.1 172.00 mm

OE 编号

BOSCH	0124315709 0124325017 0124325017-R 0124325019 0124325020 0124325036 0124325735 0124325890 0986044300 0986044540 1986A00783 1986A01137
Other	038903018E 13921 437348 SG98010

替代编码

3EFFE	ALTS117 PRAS117
A.Z. MEISTERTEILE	AZMT-49-035-1440
AIRSTAL	20-1285
ALANKO	10442343
ANDEL	ANM46520 ANM46760X
AS-PL	A0050 UD103331A
ASHDOWN INGRAM	439460
ATL AUTOTECHNIK	L44300
AUTOELECTRO	AEC1546 AEK2244
AUTOTEAM	ABO249 ABO249A AVA119 AVA119A
BORG & BECK	BBA2115
BOVEZ	STA0434R
BTS TURBO	G100394 G106130 G107502 G107503
CARGO	112399 F032112399
CASCO	CAL10249AS CAL10249GS CAL15119AS CAL15119GS

CEVAM	4034
CIVIC/DA PARTS	65-439265 70124325017
DA SILVA	011657
DELCO	DB5410 DRB4300 DRB4300X DRB4540 RAA25411
DENSO	DAN3034
DRI	211191902
DTS	A-10320
EAI	56922
ELECTROLOG	ALT0004 ALT00879 ALT0413
ELSTOCK	28-3865 28-4525
ERA	210602 210602A
EUROREPAR	1638107580
EUROTEC	12044300
FARCOM	111288
FRIESEN	9090139
GHIBAUDI	AG1090 AG1090RB

HC PARTS	CA1546IR
HELLA	8EL012428-171 8EL737783-001
HENKEL PARTS	3114875 3114876
HERTH+BUSS	32044300
HOFFER	H5510296 H5510296G
ITAB AUTOMOTIVE	20010249AV 20010249OV 20015119AV 20015119OV
KAMOKA	8620056 8620398
KRAFTVOLL GER-	11020098
KRAUF	ALB1546
KUHNER	301546RI 301546RIB 301546RIR 301546RIV
LAUBER	11.1546 11.1546M
LE PART	LEA0717
LOGISTIK	441693
MANY LUCAS	LRA01968 LRA02086 LRA1968 LRA2086
MAGNETI MARELLI	063731546010 943317591010 944390443200

	944390461600 944390461800 944390901390 MQA1546 MRA90139
MEAT & DORIA	5510296 5510296G 5515035
NK	4844300
POWERMAX	89213787 9213787
PROTECH	IR6451
QUINTON HAZELL	QRA2660
REAL	20101942BN 20101942OE 20179911BN 20179911OE
REMANTE	011-003-000439R
RHIAG	310882 310883
ROLLCO	ALT483
SANDO	2010249.0 2010249.1 2015119.0 2015119.1
SIDAT	A12BH0499 A12BH0499A2 A12VA0499 A12VA0499A2
SIOM	ALT122490 ALT122490A ALT172560 ALT7730 ALT7730A
SNRA	VW8015

SOVEREIGN	SA227 SA671 SA679 SA814 SA819
STARDAX	STX100124 STX100124R STX100544 STX100544R
STARTCAR	922ST65
TESLA TECHNICS	TT11213 TT11213PRO
THE NEWLINE	RE73589N
TMI	AL01994
VALEO	200039 2542225 2542225A 2542227 2542323 2542323A 439338 SG9B010 SG9B011 SG9B027
VW	038903018EX 059903015J 06B903016 06B903016A 06B903016AX 06B903016C 06B903016CX 06B903016D 06B903016DX 071903016C 078903016E 078903016G
WAI	13921N 13930N 205.511.090.000 205.511.090.010 205.511.090.215 205.511.090.281 205.511.090.395 205.511.090.440 205.511.090.441 205.511.090.461 205.511.090.463 205.511.090.500 205.511.090.505 205.511.090.508 205.511.090.605 A131.311 A146.324
WALKER	WAL00336
WILMINK GROUP	WG2174930 WG2280769 WG2282848 WG2283090 WG2471346 WG2631665

WILSON	90-22-5507
WOODAUTO	ALT10320 VAL439262 VALSG9B010 WOOALT10320

适用车型

AUDI

A6 C4 (4A2)

1.8 12/1995-10/1997 1.8 quattro 12/1995-10/1997

A4 B5 (8D2)

1.8 T 12/1997-11/2000 1.8 quattro 01/1995-11/2000 2.8 10/1996-11/2000

2.8 quattro 10/1996-08/2001 2.8 10/1996-11/2000 2.8 10/1996-11/2000

1.8 11/1994-11/2000 2.8 10/1996-11/2000 1.8 11/1994-11/2000

1.8 T 01/1995-11/2000 2.8 10/1996-11/2000 2.8 quattro 10/1996-08/2001

1.8 T 01/1995-11/2000 1.8 T 01/1995-11/2000

2.8 quattro 10/1996-08/2001 2.8 10/1996-11/2000

1.8 T quattro 01/1995-11/2000 1.8 T quattro 01/1995-11/2000

1.8 T 01/1995-11/2000 1.8 quattro 01/1995-11/2000 1.8 11/1994-11/2000

1.8 T 01/1995-11/2000 1.8 T quattro 01/1995-11/2000

2.8 quattro 10/1996-08/2001 1.8 T 01/1995-11/2000

2.8 quattro 10/1996-08/2001 1.8 T quattro 01/1995-11/2000

2.8 quattro 10/1996-08/2001 1.8 quattro 01/1995-11/2000

1.8 T quattro 01/1995-11/2000 2.8 quattro 10/1996-08/2001

1.8 T quattro 01/1995-11/2000 2.8 10/1996-11/2000 1.8 11/1994-11/2000

2.4 03/1997-11/2000 2.4 quattro 03/1997-11/2000

2.4 quattro 03/1997-11/2000 2.4 03/1997-11/2000

2.4 quattro 03/1997-11/2000 2.4 quattro 03/1997-11/2000

2.4 03/1997-11/2000 2.4 quattro 03/1997-11/2000 2.4 03/1997-11/2000

2.4 03/1997-11/2000 1.6 07/2000-11/2000 1.8 T quattro 12/1997-11/2000

1.8 04/1995-11/2000 1.8 quattro 07/1995-11/2000 2.4 08/1997-11/2000

2.4 quattro 08/1997-11/2000 2.4 08/1997-11/2000

2.4 quattro 08/1997-11/2000 2.4 08/1997-11/2000

2.8 quattro 09/1999-10/2000 2.8 09/1999-10/2000 1.6 11/1994-10/2000

1.6 11/1994-10/2000 1.6 11/1994-10/2000 1.6 11/1994-10/2000

A6 C5 Avant (4B5, 4B6)

1.8 T 04/1999-01/2005 2.8 quattro 12/1997-01/2005 2.8 12/1997-01/2005

1.8 T 12/1997-01/2005 1.8 12/1997-01/2005 2.8 quattro 12/1997-01/2005

1.8 12/1997-01/2005 1.8 T quattro 12/1997-01/2005

2.8 quattro 12/1997-01/2005 2.8 quattro 12/1997-01/2005

2.8 12/1997-01/2005 1.8 T 12/1997-01/2005 2.7 T 02/1999-01/2005

2.8 12/1997-01/2005 1.8 12/1997-01/2005 2.8 12/1997-01/2005

2.4 quattro 12/1997-01/2005 1.8 T quattro 12/1997-01/2005

2.4 quattro 12/1997-01/2005 1.8 T 12/1997-01/2005

2.8 quattro 12/1997-01/2005 1.8 T 12/1997-01/2005

1.8 T quattro 12/1997-01/2005 2.4 quattro 12/1997-01/2005

2.4 quattro 12/1997-01/2005 2.8 12/1997-01/2005

1.8 T quattro 12/1997-01/2005 2.8 quattro 12/1997-01/2005

1.8 T 12/1997-01/2005 2.4 quattro 12/1997-01/2005

1.8 T quattro 12/1997-01/2005 1.8 T quattro 12/1997-01/2005

1.8 02/1998-01/2005 2.4 quattro 08/1998-05/2001

2.8 quattro 08/1998-04/2001

A4 B5 Avant (8D5)

1.8 07/1995-09/2001 1.8 02/1996-09/2001 1.8 quattro 01/1996-09/2001

1.8 T 03/1996-09/2001 1.8 quattro 01/1996-09/2001

1.8 quattro 01/1996-09/2001 2.8 quattro 10/1996-09/2001

1.8 T 03/1996-09/2001 2.8 quattro 10/1996-09/2001

1.8 T quattro 01/1996-09/2001 2.8 10/1996-09/2001

2.8 quattro 10/1996-09/2001 1.8 T 03/1996-09/2001

2.8 quattro 10/1996-09/2001 1.8 T quattro 01/1996-09/2001

2.8 quattro 10/1996-09/2001 1.8 T quattro 01/1996-09/2001

1.8 T 03/1996-09/2001 1.8 T 03/1996-09/2001 2.8 10/1996-09/2001

2.8 10/1996-09/2001 2.8 10/1996-09/2001 1.8 T quattro 01/1996-09/2001

2.8 quattro 10/1996-09/2001 2.8 quattro 10/1996-09/2001

1.8 02/1996-09/2001 2.8 10/1996-09/2001 1.8 02/1996-09/2001

1.8 02/1996-09/2001 1.8 T quattro 01/1996-09/2001

1.8 T quattro 01/1996-09/2001 2.4 03/1997-09/2001

2.4 quattro 03/1997-09/2001 2.4 03/1997-09/2001 2.4 03/1997-09/2001

2.4 03/1997-09/2001 2.4 quattro 03/1997-09/2001

2.4 quattro 03/1997-09/2001 2.4 03/1997-09/2001

2.4 quattro 03/1997-09/2001 2.4 quattro 03/1997-09/2001

1.8 quattro 07/1995-09/2001 1.6 07/2000-09/2001

1.8 T quattro 12/1997-09/2001 1.8 T 12/1997-09/2001

2.4 08/1997-09/2001 2.4 quattro 08/1997-09/2001 2.4 08/1997-09/2001

2.4 quattro 08/1997-09/2001 2.4 08/1997-09/2001 2.8 03/1999-09/2000

1.6 11/1994-09/2001 1.6 11/1994-09/2001 1.6 11/1994-09/2001

1.6 11/1994-09/2001

A6 C5 (4B2, 4B4)

1.8 T 12/1997-01/2005 1.8 T 01/1997-01/2005

1.8 T quattro 02/1997-01/2005 1.8 T quattro 02/1997-01/2005

2.4 02/1997-01/2005 2.8 quattro 02/1997-01/2005 2.8 02/1997-01/2005

2.7 T 02/1999-01/2005 1.8 07/1997-01/2005 2.8 02/1997-01/2005

1.8 07/1997-01/2005 2.4 quattro 02/1997-01/2005

1.8 T quattro 12/1997-01/2005 1.8 07/1997-01/2005

2.4 quattro 02/1997-01/2005 2.4 quattro 02/1997-01/2005

2.8 quattro 02/1997-01/2005 2.4 02/1997-01/2005

2.7 T quattro 12/1997-01/2005 1.8 T 01/1997-01/2005

1.8 T quattro 02/1997-01/2005 1.8 T 01/1997-01/2005

2.7 T quattro 12/1997-01/2005 2.4 07/1998-01/2005

1.8 T 01/1997-01/2005 2.4 02/1997-01/2005 2.8 02/1997-01/2005

2.4 quattro 02/1997-01/2005 2.4 quattro 02/1997-01/2005

2.8 quattro 02/1997-01/2005 2.4 07/1998-01/2005 2.8 02/1997-01/2005

2.4 07/1998-01/2005 2.4 02/1997-01/2005 1.8 T quattro 02/1997-01/2005

1.8 T quattro 02/1997-01/2005 2.8 02/1997-01/2005

2.8 quattro 02/1997-01/2005 2.4 02/1997-01/2005

2.8 quattro 02/1997-01/2005 2.8 02/1997-01/2005 1.8 T 01/1997-01/2005

2.8 quattro 02/1997-01/2005 2.0 08/2001-01/2005 2.8 10/1997-05/2000

1.8 05/1997-01/2005 2.4 02/1997-01/2005 2.8 07/1999-01/2005

2.4 quattro 08/1998-07/1999 2.4 02/1997-01/2005 2.4 02/1997-01/2005

2.4 quattro 02/1997-01/2005 2.4 quattro 02/1997-01/2005

2.4 02/1997-01/2005 2.8 quattro 07/1999-05/2001 2.4 08/2001-01/2005

A4 B7 Convertible (8HE)

2.0 TFSI 16V 01/2006-03/2009 2.0 TFSI 16V 01/2006-03/2009

1.8 T 01/2006-03/2009

A3 (8L1)

1.8 09/1996-05/2003 1.8 09/1996-05/2003

A4 B6 Avant (8E5)

1.6 09/2001-12/2004 1.8 T 09/2001-07/2002

1.8 T quattro 09/2001-07/2002 2.0 09/2001-12/2004

1.8 T 07/2002-12/2004 1.8 T quattro 07/2002-12/2004

2.0 FSI 07/2002-12/2004

A4 B6 (8E2)

2.0 FSI 07/2002-12/2004 2.0 11/2000-12/2004 1.6 11/2000-12/2004

1.8 T 07/2002-12/2004 1.8 T quattro 07/2002-12/2004

1.8 T quattro 07/2001-12/2004 1.8 T quattro 07/2001-12/2004

1.8 T 11/2000-07/2002 1.8 T quattro 11/2000-07/2002

A4 B6 Convertible (8H7)

1.8 T 07/2002-12/2005 1.8 T quattro 05/2003-12/2005

2.0 09/2004-12/2005

A3 (8P1)

2.0 TFSI quattro 09/2004-08/2012 2.0 TFSI quattro 09/2004-08/2012

2.0 TFSI quattro 09/2004-08/2012 2.0 TFSI quattro 09/2004-08/2012

2.0 TFSI quattro 09/2004-08/2012

A3 Sportback (8PA)

2.0 TFSI 09/2004-03/2013 2.0 TFSI 09/2004-03/2013

2.0 TFSI 09/2004-03/2013 2.0 TFSI 09/2004-03/2013

2.0 TFSI 09/2004-03/2013 2.0 TFSI 09/2004-03/2013

2.0 TFSI 09/2004-03/2013

VW

PASSAT B5 Variant (3B5)

2.0 4motion 04/2000-11/2000 2.0 04/2000-11/2000

2.0 4motion 04/2000-11/2000 2.0 04/2000-11/2000

2.8 V6 Syncro/4motion 06/1997-11/2000

1.8 Syncro/4motion 06/1997-11/2000

2.8 V6 Syncro/4motion 06/1997-11/2000

1.8 Syncro/4motion 06/1997-11/2000 2.5 TDI 07/1998-11/2000

1.8 T 05/1997-11/2000 1.8 T 05/1997-11/2000 1.6 06/1997-11/2000

1.6 06/1997-11/2000 2.8 V6 Syncro/4motion 06/1997-11/2000

2.8 V6 Syncro/4motion 06/1997-11/2000

2.8 V6 Syncro/4motion 06/1997-11/2000

1.8 Syncro/4motion 06/1997-11/2000 2.3 VR5 06/1997-11/2000

2.8 V6 Syncro/4motion 06/1997-11/2000 1.6 06/1997-11/2000

1.8 T 05/1997-11/2000 2.8 V6 06/1997-11/2000 1.6 06/1997-11/2000

2.8 V6 06/1997-11/2000 2.5 TDI 07/1998-11/2000 1.8 T 05/1997-11/2000

2.8 V6 06/1997-11/2000 2.3 VR5 Syncro/4motion 10/1997-11/2000

2.8 V6 06/1997-11/2000 2.8 V6 06/1997-11/2000 1.8 T 05/1997-11/2000

2.8 V6 09/1997-09/1999 2.5 TDI Syncro/4motion 12/1998-11/2000

1.8 06/1997-11/2000 2.5 TDI Syncro/4motion 12/1998-11/2000

2.8 V6 09/1999-11/2000 1.8 06/1997-11/2000 1.8 06/1997-11/2000

1.8 06/1997-11/2000

PASSAT B5.5 Variant (3B6)

2.3 VR5 4motion 11/2000-05/2005 2.0 11/2001-05/2005

2.3 VR5 11/2000-05/2005 1.8 T 05/2002-08/2005

2.5 TDI 4motion 11/2000-05/2005 2.8 4motion 11/2000-05/2005

2.5 TDI 11/2000-05/2005 1.8 T 20V 11/2000-05/2005

2.8 4motion 11/2000-05/2005 2.0 4motion 11/2000-05/2005

2.0 11/2000-05/2005 1.6 11/2000-05/2005 2.5 TDI 05/2003-05/2005

2.5 TDI 4motion 01/2003-05/2005 2.5 TDI 4motion 01/2003-05/2005

2.8 10/2000-08/2005 2.8 10/2000-05/2005 2.8 4motion 10/2000-05/2005

PASSAT B5.5 (3B3)

2.0 11/2001-05/2005 2.3 V5 11/2000-05/2005

2.3 V5 4motion 11/2000-05/2005 1.8 T 4motion 11/2003-05/2005

2.8 4motion 11/2000-05/2005 1.8 T 20V 11/2000-05/2005

2.5 TDI 4motion 11/2000-05/2005 2.5 TDI 4motion 11/2000-05/2005

2.0 4motion 11/2000-05/2005 2.0 11/2000-05/2005

2.5 TDI 11/2000-05/2005 1.6 11/2000-05/2005

2.8 4motion 11/2000-05/2005 2.5 TDI 4motion 01/2003-05/2005

1.8 T 02/2001-11/2005 2.5 TDI 05/2003-05/2005

2.5 TDI 4motion 01/2003-05/2005 2.8 05/2002-05/2003

2.8 05/2002-05/2003 2.8 4motion 10/2000-05/2005 2.8 10/2000-05/2005

PASSAT B5 (3B2)

2.0 04/2000-11/2000 2.0 4motion 04/2000-11/2000 2.0 04/2000-11/2000

2.8 V6 Syncro/4motion 10/1996-11/2000 1.8 T 10/1996-11/2000

2.5 TDI 07/1998-11/2000 2.8 V6 Syncro/4motion 10/1996-11/2000

2.8 V6 Syncro/4motion 10/1996-11/2000 1.8 T 10/1996-11/2000

2.8 V6 08/1996-11/2000 2.8 V6 Syncro/4motion 10/1996-11/2000

2.8 V6 08/1996-11/2000 2.8 V6 08/1996-11/2000 1.8 T 10/1996-11/2000

2.5 TDI 07/1998-11/2000 1.8 Syncro/4motion 12/1996-08/2000

1.8 T 10/1996-11/2000 2.8 V6 Syncro/4motion 10/1996-11/2000

2.8 V6 08/1996-11/2000 1.8 Syncro/4motion 12/1996-08/2000

1.8 Syncro/4motion 12/1996-08/2000

2.5 TDI Syncro/4motion 12/1998-11/2000 2.8 V6 09/1999-11/2000

1.8 01/1997-11/2000 2.8 V6 09/1999-11/2000

2.5 TDI Syncro/4motion 12/1998-11/2000 2.8 V6 05/1997-09/1999

1.8 10/1996-11/2000 1.8 10/1996-11/2000 1.8 10/1996-11/2000

1.6 10/1996-11/2000 1.6 10/1996-11/2000 1.6 10/1996-11/2000

1.6 10/1996-11/2000 2.3 VR5 Syncro/4motion 10/1997-11/2000

2.3 VR5 10/1996-11/2000 1.8 T 10/1996-11/2000

PASSAT CC B6 (357)

1.8 TSI 06/2008-01/2012 1.8 TSI 06/2008-01/2012

SCIROCCO Van (137)

2.0 TFSi 11/2009-05/2014

EOS (1F7, 1F8)

2.0 TFSI 03/2006-08/2015 2.0 TFSI 03/2006-08/2015

2.0 TFSI 03/2006-08/2015 2.0 TFSI 03/2006-08/2015

2.0 TFSI 03/2006-08/2015 2.0 TFSI 03/2006-08/2015

SEAT

TOLEDO III (5P2)

1.8 TFSI 01/2007-05/2009 1.8 TFSI 01/2007-05/2009

1.8 TFSI 01/2007-05/2009

EXEO ST (3R5)

1.8 T 06/2009-05/2010 1.6 06/2009-09/2010

EXEO (3R2)

1.8 T 12/2008-05/2010 1.6 03/2009-09/2010

SKODA

SUPERB I (3U4)

2.0	12/2001-03/2008	1.8 T	12/2001-03/2008	2.5 TDI	12/2001-08/2003
2.8 V6	12/2001-03/2008	2.5 TDI	06/2003-03/2008	2.8 V6	06/2002-03/2008