SINTLY

SINTLY | ALTERNATOR

XTLALT3091

VOLTAGE 12 V

OUTPUT CURRENT 125 A

APPLICATIONS For CITROËN, DS, FIAT, OPEL, PEUGEOT, TOYOTA, VAUXHALL

DIMENSIONS

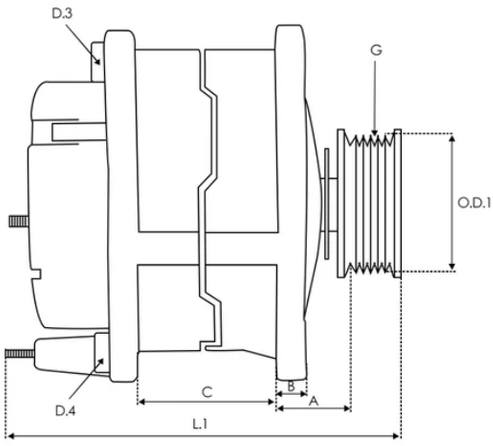

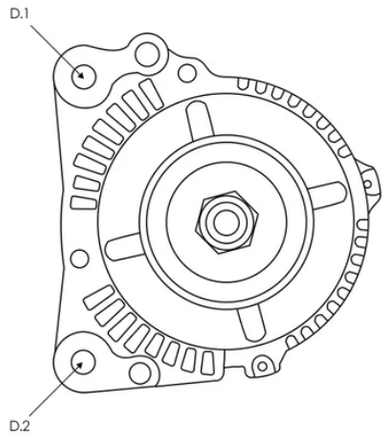

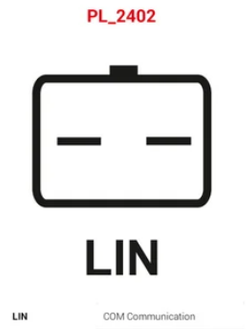

A 42.50 mm B 21.00 mm C 48.00 mm G 6 qty. O.D.1 54.50 mm D.1 10.00 mm D.2 10.00 mm D.3 M10x1.5 mm D.4 M10x1.5 mm L.1 174.00 mm

OE 编号

VALEO	2610711B 2625767 2625767A 2713135A 2715105 439758 439928 440350 440671 440814 440819 443015 443017 443388 610711 624851 625767 NRG12S010 TG12C106 TG12C228 TG12C261
Other	1608064580 20653 TG12C106

替代编码

3EFFE	ALTS637 PRAS637
ACAUTO	AC-CBA6236
AES	14201444 14201490 14201492
ALANKO	10444881
ANDEL	ANM100098 ANM33323X
APEC	AAL2117
AS-PL	A3455S UD105171A UD17253A
ATL AUTOTECHNIK	L51920
AUTOTEAM	AVA590 AVA590A
BOSCH	0986083800 F000BL07TV
CARGO	116237 116541 F032116541
CARWOOD GROUP	BREF0320986083800 BREF032116541
CASCO	CAL15590AS CAL15590GS
CEVAM	40752 9189
DA SILVA	012701 031729

DELCO	8400306 DA2213 DRA1103 DRA2128 DRA2144
DIPASPORT	ALT148KUHN
DRI	2291501202 2291541202
EAI	57443 57779
ELECTROLOG	ALT00511 ALT00959 ALT01135
ELSTOCK	28-6839 28-8580
ERA	209223 211101R
FARCOM	115422
FRIESEN	9091037
GM	95524680
HERTH+BUSS	32005034
ITAB AUTOMOTIVE	20015590AV 20015590OV
KAMOKA	8620115
KRAUF	ALV2978
KUHNER	554553RI 554553RIV 555266RI 555266RIS 555266RIV

LOGISTIK	442619 442804
LUCAS	LRA03728 LRA04471 LRA3728 LRA4471
MAGNETI MARELLI	063730846010 MQ846
MOTRIO	8550504795
NK	4899002
OPEL	3648696
PEUGEOT	1612380080 1619607980 1624230480 1637302880 1648232180 1686437380 9670899580 9809391880 9810971880 9818677980
PRESTOLITE	A2110V
PROTECH	IR5575
QUINTON HAZELL	QRA0370 QRA3361
REAL	20179095BN 20179095OE
RNL	RNLTG12C106
ROLLCO	ALT2339CP ALT2520CP
SANDO	2015590.0 2015590.1
SIDAT	A12VA0250 A12VA0250A2 A12VA0250AS

SIOM	ALT175590 ALT175900A
SNRA	TP8063
STARDAX	STX101618 STX101618R
STARTCAR	779ST75
THE NEWLINE	RE73867N
TMI	AL04346
TOYOTA	27060-YV030
TURBO-TEC	TTAL001314
WAI	20653N 20653N-OE 21607N 21607OS 225.562.120.000 225.562.120.004 225.562.120.346 225.562.120.440 225.562.120.502 225.583.120.000 225.583.120.280 225.583.120.346 225.583.120.347 225.583.120.440 225.583.120.500 225.583.120.501 A131.859 A131.894 A147.373
WALKER	WAL00343
WILMINK GROUP	WG2458598 WG2471782
WOODAUTO	VAL439758 VAL439928 VAL443017 VALTG12C106 WOOALT14672

适用车型

CITROËN

C5 AIRCROSS (A_)

1.5 BlueHDi 130 (ACYHZJ, ACYHZR) 11/2018

1.2 PureTech 130 (ARHNSJ) 11/2018

JUMPY III Van (V_)

1.5 BlueHDi 120 06/2018 1.5 BlueHDi 100 06/2018

C4 CACTUS Van (0B_, 0P_)

BlueHDi 100 05/2019 PureTech 110 05/2019 PureTech 110 05/2019

PureTech 82 05/2019 PureTech 130 05/2019

BERLINGO (ER_, EC_)

1.2 PureTech 110 06/2018 1.5 BlueHDi 75 06/2018

1.2 PureTech 130 07/2019 1.5 BlueHDi 130 (ECYHZJ, ECYHZR) 06/2018

1.5 BlueHDi 100 06/2018 1.5 BlueHDi 100 06/2018

C4 CACTUS

1.5 BlueHDi 100 06/2018 1.2 VTi 82 09/2014 1.2 THP 110 09/2014

1.2 THP 110 09/2014 1.2 THP 110 09/2014

1.2 VTi 75 / PureTech 75 09/2014 1.2 VTi 75 / PureTech 75 09/2014

1.2 PureTech 130 11/2017 1.2 PureTech 130 11/2017

C3 AIRCROSS II (2R_, 2C_)

1.5 BlueHDi 100 (2CYHYJ) 08/2018

1.2 PureTech 82 (2RHMRC, 2RHMZB) 06/2017

1.2 PureTech 130 (2RHNYH) 07/2017

1.2 PureTech 82 (2RHMRC, 2RHMZB) 06/2017

1.2 PureTech 130 (2RHNYH) 07/2017

1.2 PureTech 110 (2RHNZB, 2RHNZW, 2RHNPX, 2RHNPJ) 06/2017

1.2 PureTech 110 (2RHNZB, 2RHNZW, 2RHNPX, 2RHNPJ) 06/2017

1.2 PureTech 110 (2RHNZB, 2RHNZW, 2RHNPX, 2RHNPJ) 06/2017

BERLINGO Box Body/MPV (K9)

PureTech 110 06/2018

1.5 BlueHDi 100 06/2018

1.5 BlueHDi 100 06/2018

PureTech 130 10/2019

1.5 BlueHDi 75 10/2019

1.5 BlueHDi 130 06/2018

C3 III (SX)

1.6 VTi (SXNFPT) 02/2017

1.5 BlueHDi 100 (SXYHYP, SXYHTU) 05/2018

1.5 BlueHDi 100 (SXYHYP, SXYHTU) 05/2018

1.2 THP 110 (SXHNPS, SXHNZT, SXHNZ6) 07/2016

1.2 PureTech 82 05/2018

1.2 VTi 68 07/2016

1.2 VTi 82 07/2016

1.2 THP 110 (SXHNPS, SXHNZT, SXHNZ6) 07/2016

1.2 VTi 68 07/2016

1.2 THP 110 (SXHNPS, SXHNZT, SXHNZ6) 07/2016

1.2 PureTech 82 LPG 05/2018

1.2 VTi 82 LPG 07/2016

BERLINGO Box Body/MPV (B9)

PureTech 110 01/2018

C3 ORIGIN III (SX)

1.2 PURETECH 110 (SXHNPY, SXHNPZ) 03/2024

1.2 PURETECH 82 (SXHMRV) 03/2024

1.5 BlueHDi 100 (SXYHTU) 03/2024

C3 AIRCROSS II Van (2C_, 2R_)

1.5 BlueHDI 100 05/2019 PureTech 82 05/2019

C3 III Van (SX_, SY_)

PureTech 110 03/2019 PureTech 82 03/2019 BlueHDi 100 03/2019

1.2 VTi 07/2016

DS3 (SA_)

1.2 VTi 82 01/2013-03/2015 1.2 VTi 82 01/2013-03/2015

1.2 THP 110 10/2014-03/2015

C-ELYSEE (DD_)

1.2 VTi 72 (DDHMY0) 11/2012-01/2017 1.2 VTi 82 12/2014

1.2 VTi 82 12/2014 1.2 PureTech 82 (DDHMRP) 02/2018

1.5 BlueHDi 100 05/2018 1.5 BlueHDi 100 05/2018

1.6 VTi 115 (DDNFP0, DDNFP6, DDNFP9) 11/2012

DS3 Convertible

1.2 THP 110 10/2014-07/2015 1.2 VTi 82 01/2013-07/2015

C1 II (PA_, PS_)

1.2 VTi 82 04/2014-04/2018 1.2 VTi 82 04/2014-04/2018

1.2 VTi 82 04/2014-04/2018

C4 PICASSO II

1.2 THP 130 04/2014 1.2 THP 110 04/2016

C4 II (NC_)

1.2 THP 130 (NCHNYM, NCHNYT) 04/2014-12/2017

1.2 THP 110 (NCHNZ6, NCHNV6) 02/2015-12/2017

1.2 THP 110 (NCHNZ6, NCHNV6) 02/2015-12/2017

DS4 (NX_)

1.2 THP 130 07/2014-07/2015

C3 II (SC_)

1.0 VTi 68 08/2012-09/2016

1.2 THP 110 10/2014-09/2016

1.2 VTi 82 06/2012-09/2016

1.2 VTi 82 06/2012-09/2016

C3 PICASSO (SH_)

1.2 THP 110 (SHHNZ6) 01/2015-12/2015

C4 GRAND PICASSO II (DA_, DE_)

1.2 THP 130 04/2014

C4 SPACETOURER (3D_)

1.2 PureTech 110 04/2018

1.2 PureTech 130 04/2018

1.2 PureTech 130 04/2018

JUMPY III Bus (V_)

1.5 BlueHDi 120 06/2018

1.5 BlueHDi 100 06/2018

GRAND C4 SPACETOURER (3A_, 3E_)

1.2 PureTech 130 04/2018

1.2 PureTech 130 04/2018

BERLINGO MULTISPACE (B9)

1.2 PureTech 110 02/2016

GRAND C4 SPACETOURER Van (3A_, 3E_)

PureTech 130 05/2019

C4 SPACETOURER Van (3D_)

PureTech 130 05/2019

C4 III (BA_, BB_, BC_)

1.2 PureTech 130 (BAHNSA, BAHNSB) 10/2020

SPACETOURER Bus (V_)

1.5 BlueHDi 120 06/2018

OPEL

COMBO E Tour / Life (K9)

1.2 06/2018 1.2 06/2018 1.2 07/2019 1.5 06/2018 1.5 06/2018

1.5 06/2018 1.5 06/2018

CROSSLAND X / CROSSLAND (P17, P2QO)

1.5 Turbo D (75) 08/2018 1.5 Turbo D (75) 08/2018

1.5 Turbo D (75) 06/2018 1.2 (75) 03/2017 1.2 (75) 03/2017

1.2 (75) 03/2017 1.2 (75) 03/2017 1.2 LPG (75) 10/2017

1.2 (75) 03/2017 1.2 (75) 03/2017 1.2 (75) 03/2017

1.2 (75) 03/2017 1.2 07/2019 1.5 (75) 10/2020

CORSA F (P2JO)

1.5 (68) 07/2019 1.5 (68) 07/2019 1.2 (68) 07/2019

1.2 (68) 07/2019 1.2 (68) 07/2019 1.2 (68) 07/2019

1.2 (68) 07/2019

VIVARO C Van (K0)

1.5 4x4 03/2019 1.5 03/2019 1.5 03/2019

COMBO Box Body/MPV (K9)

1.2 09/2019 1.2 02/2019 1.2 02/2019 1.5 D 08/2018

1.5 D 08/2018 1.5 D 08/2018 1.5 D 08/2018

CORSA F Hatchback Van

1.5 (68) 07/2019 1.2 (68) 07/2019

ZAFIRA LIFE Bus (K0)

1.5 03/2019 1.5 03/2019

CROSSLAND X Van

1.5 (75) 06/2018 1.2 (75) 07/2019 1.2 (75) 07/2019

1.2 (75) 07/2019

VIVARO C Bus (K0)

1.5 03/2019 1.5 03/2019

GRANDLAND X Van

1.2 (75) 04/2018-07/2021 1.5 (75) 04/2018-07/2021

GRANDLAND / GRANDLAND X (A18, P1UO)

1.5 Turbo D (75) 04/2018 1.5 Turbo D (75) 06/2018-07/2021

ASTRA L Sports Tourer (OV5)

1.2 (FRHNSL, FRHNSR) 10/2021 1.2 (FRHNPJ) 10/2021

ASTRA L (OV5)

1.2 (FPHNSL, FPHNSR) 10/2021 1.2 (FPHNPJ) 10/2021

MOKKA

1.2 (76) 10/2020 1.2 (76) 10/2020

PEUGEOT

208 I (CA_, CC_)

1.5 BlueHDI 100 05/2018-12/2019
1.2 VTI 82 03/2012-12/2019
1.2 VTI 82 03/2012-12/2019
1.0 VTi 03/2012-12/2019
1.2 THP 110 01/2013-12/2019
1.2 THP 110 01/2013-12/2019
1.2 THP 110 01/2013-12/2019
1.2 PureTech 82 03/2018-12/2019
1.2 VTi 68 / PureTech 68 08/2016-12/2019
1.2 GPL 06/2015-12/2019
1.2 VTi 68 / PureTech 68 08/2016-12/2019
1.2 GPL 06/2015-12/2019
1.2 PureTech 82 03/2018-12/2019

2008 I (CU_)

1.5 BlueHDI 100 05/2018
1.2 PureTech 82 01/2018-12/2019
1.2 THP 130 / PureTech 130 01/2015-11/2019
1.2 THP 130 / PureTech 130 01/2015-11/2019
1.2 VTi 03/2013-12/2018
1.6 BlueHDi 100 01/2015-11/2019
1.2 THP 110 / PureTech 110 01/2015
1.2 THP 110 / PureTech 110 01/2015
1.2 VTi 03/2013-12/2018
1.2 THP 110 / PureTech 110 01/2015
1.6 BlueHDi 120 07/2014-04/2018
1.6 BlueHDi 75 01/2015-11/2019
1.6 HDi 03/2013
1.6 HDi 03/2013
1.6 BlueHDi 07/2014

2008 I Van (CU_)

BlueHDi 100 (CUYHYM) 05/2018
PureTech 130 (CUHNYM, CUHNSS) 01/2018-11/2019
PureTech 130 (CUHNYM, CUHNSS) 01/2018-11/2019

308 II (LB_, LP_, LW_, LH_, L3_)

1.5 BlueHDi 130 06/2017-06/2021
1.2 THP 110 11/2013-06/2021
1.2 THP 130 11/2013-06/2021
1.2 THP 110 11/2013-06/2021
1.2 THP 110 11/2013-06/2021
1.2 VTi 72 09/2013-06/2021
1.2 THP 130 11/2013-06/2021
1.5 BlueHDI 100 05/2018-06/2021

RIFTER

1.2 PureTech 110 09/2018
1.5 BlueHDi 100 09/2018
1.5 BlueHDi 100 09/2018
1.2 PureTech 130 07/2019
1.5 BlueHDi 130 09/2018
1.5 BlueHDi 75 (ECYHW) 09/2018

308 SW II (LC_, LJ_, LR_, LX_, L4_)

1.5 BlueHDi 130 06/2017-06/2021
1.2 THP 110 03/2014-06/2021
1.2 THP 130 03/2014-06/2021
1.2 THP 110 03/2014-06/2021
1.2 THP 130 03/2014-06/2021
1.2 THP 110 03/2014-06/2021
1.5 BlueHDi 100 04/2018-06/2021

208 Hatchback Van (CR_)

1.5 BlueHDi 100 05/2018-12/2019
1.2 VTI 82 / PureTech 82 (CRHMZ6, CRHMRP) 06/2015-12/2019
1.2 VTI 82 / PureTech 82 (CRHMZ6, CRHMRP) 06/2015-12/2019
1.2 VTI 82 / PureTech 82 (CRHMZ6, CRHMRP) 06/2015-12/2019
1.6 BlueHDi 75 04/2015-12/2019

PARTNER Box Body/MPV (K9)

1.2 PureTech 110 07/2019
1.5 BlueHDI 130 09/2018
1.5 BlueHDi 100 07/2019
1.2 PureTech 130 07/2019

1.5 BlueHDi 75 07/2019 1.5 BlueHDi 100 07/2019

301

1.2 PureTech 82 02/2018 1.2 VTi 72 11/2012 1.2 VTi 82 12/2014

1.5 BlueHDI 100 05/2018 1.6 LPG 07/2014

208 II (UB_, UP_, UW_, UJ_)

1.2 VTi 82 06/2019 1.2 PureTech 75 06/2019 1.2 VTi 82 06/2019

1.2 PureTech 75 06/2019 1.2 PureTech 100 06/2019

1.2 PureTech 130 06/2019 1.2 PureTech 100 06/2019

1.2 PureTech 130 06/2019 1.2 PureTech 100 06/2019

5008 (0U_, 0E_)

1.2 01/2015-03/2017

3008 I MPV (0U_)

1.2 01/2015-08/2016

108

1.2 05/2014 1.2 05/2014 1.2 05/2014

EXPERT Van (V_)

1.5 BlueHDi 120 06/2018 1.5 BlueHDi 100 06/2018

PARTNER TEPEE

1.2 THP 02/2016 1.2 THP 02/2016

EXPERT Bus (V_)

1.5 BlueHDi 120 06/2018 1.5 BlueHDi 100 06/2018

3008 II SUV (MC_, MR_, MJ_, M4_)

1.2 THP/ PureTech 130 (MRHNSM, MRHNSU, MRHNSJ, MRHNYW,... 05/2016

1.2 THP/ PureTech 130 (MRHNSM, MRHNSU, MRHNSJ, MRHNYW,... 05/2016

2.0 BlueHDi 180 01/2018

5008 II (MC_, MJ_, MR_, M4_)

1.2 THP (MRHNYH, MRHNYW, MRHNSJ, MRHNSU, MRHNSM) 12/2016

1.2 THP (MRHNYH, MRHNYW, MRHNSJ, MRHNSU, MRHNSM) 12/2016

PARTNER Box Body/MPV

1.2 THP 02/2016

3008 Van (MR_, MC_, MJ_)

PureTech 130 (MRHNYH) 05/2016

508 II (FB_, FH_, F3_)

PureTech 130 (FBHNSR) 06/2020

508 SW II (FC_, FJ_, F4_)

PureTech 130 06/2020

TRAVELLER Bus (V_)

1.5 BlueHDi 100 06/2018 1.5 BlueHDi 120 06/2018

2008 II (UD_, US_, UY_, UJ_, UR_, UC_)

1.2 PureTech 100 (USHNK) 11/2019

1.2 PureTech 130 (USHNS, URHNS) 08/2019

TOYOTA

AYGO (_B4_)

1.2 (PAB40) 05/2014

DS

DS 3 / DS 3 CROSSBACK (UR_, UC_, UJ_)

1.2 PureTech 100 (URHNKK, URHNEK) 10/2018

1.2 PureTech 130 (URHNSS) 10/2018

1.2 PureTech 155 (URHNNS) 10/2018-12/2022

DS 7 Crossback (J4_, JR_, JC_)

PureTech 130 (JRHNSU) 10/2018-09/2022

DS 3 (SA_)

1.2 THP 110 / PureTech 110 (SAHNPS, SAHNZ6, SAHNZT) 04/2015-07/2019

1.2 VTi 82 (SAHMZ6) 04/2015-07/2019

1.2 THP 130 (SAHNYM) 09/2015-07/2019

1.2 VTi 82 (SAHMZ6) 04/2015-07/2019

1.2 THP 110 / PureTech 110 (SAHNPS, SAHNZ6, SAHNZT) 04/2015-07/2019

DS 3 Convertible (SB_)

1.2 VTi 82 07/2015-07/2019

1.2 THP 110 07/2015-07/2019

1.2 THP 110 07/2015-07/2019

1.2 THP 130 09/2015-07/2019

DS 4 / DS 4 CROSSBACK (NX_)

1.2 THP 130 (NXHNYM) 07/2015-12/2018

VAUXHALL

GRANDLAND X / GRANDLAND (A18)

1.5 Turbo D (75) 04/2018

FIAT

SCUDO Van

1.5 Multijet 120 (506) 01/2022