SINTLY

SINTLY | ALTERNATOR **XTLALT3144**

VOLTAGE **12** V

OUTPUT CURRENT **140** A

APPLICATIONS For AUDI, CUPRA, SEAT, SKODA, VW

DIMENSIONS

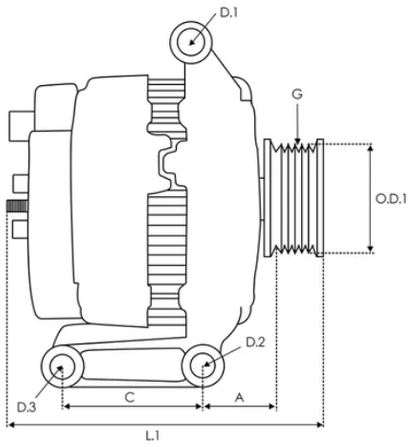

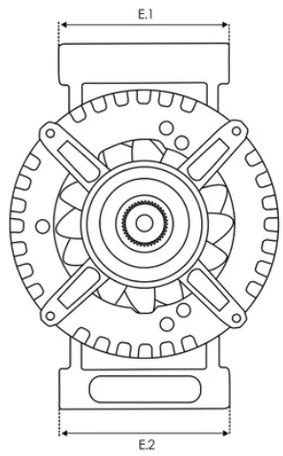

PL_2306

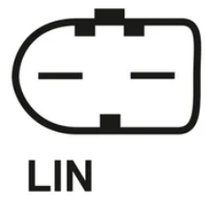

LIN COM Communication

A **31.00 mm** C **56.00 mm** G **6 qty.** O.D.1 **56.00 mm** D.1 **9.00 mm** D.2 **9.00 mm** D.3 **8.50 mm** E.1 **70.00 mm** E.2 **70.00 mm**
L.1 **186.00 mm**

OE 编号

BOSCH	0986086080 1986A01251 1986A01373 1986A01391 F000BL0803 F000BL0829 F000BL08K1 F000BL08K2 F000BL08P1 F000BL08P2 F000BL08S9 F000BL08X5 F000BLO803
Other	06J903023A TG14C041 TG14C096

替代编码

3EFFE	ALTS643 ALTS643V PRAS643
AUTOELECTRO	AEK3658
CARGO	116387 F032116387
CASCO	CAL10469GS CAL15552GS
CEVAM	9481
DELCO	DA2331 DRA1221
EAI	57424
ELECTROLOG	ALT0406 ALT1185
ELSTOCK	28-6798
ERA	209286
HELLA	8EL015630-031
HERTH+BUSS	32000322
KRAUF	ALB3903
KUHNER	553753RIB 553753RIV 554038RIB
LOGISTIK	442121

LUCAS	LRA03658 LRA3658
MEAT & DORIA	5510639 5515504
POWERMAX	89215744
REAL	20101964OE 20179255OE
ROLLCO	ALT2307CP
SANDO	2010469.1 2015552.1
SIDAT	A12BH0754AS A12VA0863 A12VA0863A2 A12VA0863AS
SIOM	ALT175520
STARDAX	STX102049
VALEO	439814 440468 TG14C104 TG14C106 TG14C134
VW	06J903023AX 06J903023B 06J903023BX 06J903023D 06J903023DX 06J903023G 06J903023GX 06J903023H 06J903023HX 06J903024A 06J903024D 06K903015A 06K903024A 06K903024AX 06K903024C 06K903024CX 6J903023A 6J903023AX 6J903023B 6J903023BX 6J903023D 6J903023DX 6J903023G 6J903023GX 6J903023H 6J903023HX 6J903024A 6J903024D 6K903024A 6K903024AX 6K903024C 6K903024CX L06J903023H

WAI	20354N 205.556.140.014 205.556.140.019 205.556.140.281 205.556.140.282 24226N A146.429
WILSON	90-15-6712
WOODAUTO	ALT10726 ALT14576 VAL439814 VALTG14C041

适用车型

AUDI

A1 (8X1, 8XK)

1.8 TFSI 02/2015-10/2018 S1 quattro 03/2014-10/2018

TT Roadster (FV9, FVR)

2.0 TTS quattro 08/2018 40 TFSI 07/2018 45 TFSI quattro 07/2018

40 TFSI 07/2018 45 TFSI quattro 07/2018 45 TFSI 07/2018

45 TFSI 07/2018 1.8 TFSI 07/2015-08/2018 2.0 TTS quattro 02/2015

1.8 TFSI 07/2015-08/2018 2.0 TFSI quattro 11/2014

2.0 TTS TFSI quattro 11/2014 2.0 TFSI 11/2014

TT (FV3, FVP)

2.0 TTS quattro 08/2018 40 TFSI 07/2018 40 TFSI 07/2018

45 TFSI quattro 07/2018 45 TFSI 07/2018 45 TFSI quattro 07/2018

45 TFSI 07/2018 2.0 TTS quattro 07/2015 2.0 TTS quattro 07/2015

2.0 TTS quattro 11/2014 2.0 TFSI quattro 07/2014

1.8 TFSI 07/2015-08/2018 1.8 TFSI 07/2015-08/2018 2.0 TFSI 07/2014

2.0 TTS quattro 02/2015

A1 Sportback (8XA, 8XF)

1.8 TFSI 02/2015-10/2018 S1 quattro 03/2014-10/2018

A1 Sportback (GBA)

40 TFSI 09/2018 40 TFSI 09/2018

A3 Limousine (8VS, 8VM)

1.8 TFSI 11/2013-10/2020 40 TFSI quattro 07/2018-10/2020

S3 quattro 10/2013-10/2020 S3 quattro 10/2013-10/2020

S3 quattro 10/2013-05/2014 1.8 TFSI quattro 11/2013-08/2016

1.8 TFSI 05/2013-08/2016 S3 quattro 05/2014-10/2020

S3 quattro 05/2014-08/2016 S3 quattro 05/2014-10/2020

1.8 TFSI 05/2013-08/2016 S3 quattro 05/2014-10/2020

2.0 TFSI quattro 05/2016-10/2020 2.0 TFSI 11/2015-10/2020

S3 quattro 06/2016-10/2020 2.0 TFSI 05/2016-10/2020

2.0 TFSI quattro 05/2016-10/2020 2.0 TFSI 05/2016-10/2020

S3 quattro 06/2016-10/2020 2.0 TFSI 11/2015-10/2020

40 TFSI 07/2018-10/2020

A3 Convertible (8V7, 8VE)

1.8 TFSI 05/2014-10/2020 S3 quattro 07/2016-10/2020

1.8 TFSI 10/2013-07/2016 1.8 TFSI 10/2013-07/2016

1.8 TFSI quattro 03/2014-07/2016 S3 quattro 04/2014-10/2020

2.0 TFSI quattro 05/2014-10/2020 S3 quattro 04/2014-10/2020

2.0 TFSI quattro 05/2016-10/2020 2.0 TFSI 05/2016-10/2020

40 TFSI 11/2018-10/2020 40 TFSI quattro 11/2018-10/2020

A3 Sportback (8VA, 8VF)

2.0 TFSI quattro 05/2016-10/2020 2.0 TFSI quattro 05/2016-10/2020

40 TFSI quattro 07/2018-10/2020 1.8 TFSI 09/2012-08/2016

1.8 TFSI 09/2012-08/2016 1.8 TFSI quattro 05/2013-08/2016

S3 quattro 11/2012-10/2020 S3 quattro 05/2013-08/2016

S3 quattro 11/2012-10/2020 S3 quattro 05/2014-08/2016

S3 quattro 07/2016-10/2020 2.0 TFSI 05/2016-10/2020

2.0 TFSI 05/2016-10/2020 S3 quattro 06/2016-10/2020

S3 quattro 06/2016-10/2020 S3 quattro 07/2016-10/2020

40 TFSI 07/2018-10/2020

Q3 (F3B)

45 TFSI quattro 07/2018 40 TFSI quattro 07/2018

40 TFSI quattro 07/2018

Q3 Sportback (F3N)

40 TFSI quattro 11/2019 45 TFSI quattro 06/2019

40 TFSI quattro 11/2019

A3 (8V1, 8VK)

1.8 TFSI 04/2012-08/2016 1.8 TFSI quattro 08/2012-08/2016

S3 quattro 11/2012-08/2016 S3 quattro 02/2013-07/2014

S3 quattro 05/2014-08/2016 2.0 TFSI quattro 05/2016-12/2017

S3 quattro 07/2016-12/2017 S3 quattro 06/2016-12/2017

2.0 TFSI 05/2016-12/2017 S3 quattro 07/2016-12/2017

S3 quattro 06/2016-12/2017

Q7 (4LB)

3.0 TFSI quattro 05/2010-08/2015 3.0 TFSI quattro 05/2010-08/2015

Q3 (8UB, 8UG)

2.0 TFSI 05/2015-10/2018 2.0 TFSI quattro 11/2014-10/2018

2.0 TFSI quattro 11/2014-10/2018

A3 (8P1)

1.8 TFSI quattro 07/2008-08/2012 1.8 TFSI 11/2006-08/2012

1.8 TFSI 11/2006-08/2012 1.8 TFSI 11/2006-08/2012

Q2 (GAB, GAG)

2.0 TFSI quattro 05/2017 2.0 TFSI quattro 05/2017

SQ2 TFSI quattro 08/2018 SQ2 TFSI quattro 08/2018

40 TFSI quattro 09/2018 40 TFSI quattro 09/2018

SEAT

LEON ST (5F8)

1.8 TSI 4Drive 11/2014-08/2018 1.8 TSI 4Drive 11/2014-08/2018

2.0 TSI 07/2018-08/2020 2.0 TSI 4Drive 09/2018-08/2020

1.8 TSI 10/2013-08/2018 2.0 Cupra 10/2013-08/2020

2.0 Cupra 10/2013-08/2020 2.0 Cupra 10/2015-08/2020

2.0 Cupra 11/2016-08/2018 2.0 Cupra 10/2015-08/2020

2.0 TDI 4Drive 04/2014-08/2020 2.0 TDI 4Drive 04/2014-08/2020

2.0 TDI 4Drive 04/2014-08/2020 2.0 TDI 4Drive 04/2014-08/2020

2.0 TDI 4Drive 04/2014-08/2020 2.0 Cupra 4Drive 11/2016-08/2020

2.0 Cupra 4Drive 11/2016-08/2020

ALHAMBRA (710, 711)

2.0 TSI 05/2015-12/2022

ATECA (KH7, KHP)

2.0 TSI 4Drive 05/2017 2.0 TSI 4Drive 05/2017 2.0 TSI 4Drive 05/2017

IBIZA IV SC (6J1, 6P5)

1.8 TSI Cupra 11/2015-12/2016

LEON (5F1)

2.0 TSI 09/2018-08/2020 1.8 TSI 02/2013-08/2018

2.0 Cupra 10/2013-08/2020 2.0 Cupra 10/2013-08/2020

2.0 Cupra 01/2017-08/2018 2.0 Cupra 10/2015-08/2020

2.0 Cupra R 11/2017-08/2018 2.0 Cupra 10/2015-08/2020

TARRACO (KN2)

2.0 TSI 4Drive 11/2018 2.0 TSI 4Drive 11/2018

LEON SC (5F5)

1.8 TSI 02/2013-08/2018 2.0 Cupra 10/2013-11/2016

2.0 Cupra 10/2013-11/2016 2.0 Cupra 01/2017-08/2018

2.0 Cupra 10/2015-11/2016

LEON ST Estate Van (5F8)

2.0 Cupra 10/2013-08/2020 1.8 TFSI 10/2013-08/2018

LEON Hatchback Van (5F1)

2.0 Cupra 09/2015-10/2016 2.0 TDI 10/2012-08/2018

1.8 TFSI 02/2013-08/2018 2.0 TDI 10/2012-08/2018

EXEO ST (3R5)

2.0 TDI 07/2009-05/2013 2.0 TDI 07/2009-05/2013

EXEO (3R2)

2.0 TDI 12/2008-05/2013 2.0 TDI 12/2008-05/2013

VW

GOLF VII (5G1, BQ1, BE1, BE2)

2.0 R 360S 4motion 09/2016-03/2017 2.0 GTI 04/2013-08/2020

2.0 R 4motion 11/2013-03/2017 2.0 GTI 04/2013-08/2020

2.0 R 4motion 11/2013-08/2020 2.0 GTI 11/2013-07/2017

2.0 GTI 04/2013-08/2020 2.0 GTI 04/2013-08/2020

2.0 GTI 04/2013-08/2020 2.0 GTI 04/2013-08/2020

2.0 GTI 11/2013-07/2017 2.0 R 4motion 11/2013-08/2020

2.0 R 4motion 12/2016-08/2020 2.0 R 4motion 12/2016-08/2020

2.0 GTI 03/2017-08/2020 2.0 GTI 03/2017-08/2020

2.0 R 4motion 12/2016-08/2020 2.0 GTI Clubsport 02/2016-03/2017

2.0 R 4motion 12/2016-08/2020 2.0 R 4motion 12/2016-08/2020

2.0 GTI Clubsport S 09/2016-03/2017 2.0 GTI TCR 11/2018-08/2020

2.0 GTI TCR 11/2018-08/2020

ARTEON SHOOTING BRAKE (3H9)

2.0 TSi 09/2020 2.0 TSi 09/2020 2.0 TSi 09/2020 2.0 TSi 09/2020

2.0 TSI 4motion 06/2020 2.0 TSi 4motion 06/2020

2.0 TSI 4motion 06/2020

ARTEON (3H7, 3H8)

2.0 TSI R 11/2020 2.0 TSI 4motion 04/2017 2.0 TSI 4motion 04/2017

2.0 TSI 05/2017 2.0 TSI 05/2017 2.0 TSI 05/2017

2.0 TSI 4motion 04/2018-02/2022 2.0 TSI 4motion 04/2018-02/2022

TIGUAN (AD1, AX1)

2.0 TSI R 4motion 11/2020 2.0 TSI R 4motion 11/2020

2.0 TSI 4motion 06/2016 2.0 TSI 4motion 09/2018

2.0 TSI 4motion 09/2018 2.0 TSI 4motion 09/2018-07/2020

1.4 TSI 05/2016 2.0 TSI 4motion 01/2016 1.4 TSI 05/2016

1.4 TSI 05/2016

SHARAN (7N1, 7N2)

2.0 TSI 05/2015-12/2020

BEETLE (5C1, 5C2)

2.0 TSI 12/2014-09/2018 1.4 TSI 12/2014-07/2019

BEETLE Convertible (5C7, 5C8)

2.0 TSI 12/2014-09/2018

T-ROC (A11, D11)

2.0 TSI 4motion 07/2017 2.0 TSI 4motion 07/2017

2.0 TSI 4motion 07/2017 2.0 R 4motion 09/2019

2.0 R 4motion 09/2019

TIGUAN ALLSPACE (BW2, BJ2)

2.0 TSI 4motion 09/2020
2.0 TSI 4motion 07/2017
2.0 TSI 4motion 07/2017
2.0 TSI 4motion 03/2017
2.0 TSI 4motion 09/2018
2.0 TSI 4motion 09/2018

PASSAT B8 (3G2, CB2)

2.0 TSI 11/2018
2.0 TSI 11/2018
2.0 TSI 11/2018
2.0 TSI 11/2018
2.0 TSI 02/2015
2.0 TSI 4motion 05/2015
2.0 TSI 4motion 05/2015
2.0 TSI 02/2015
1.8 TSI 02/2015
1.8 TSI 02/2015
2.0 TSI 4motion 09/2018

PASSAT B8 Variant (3G5, CB5)

2.0 TSI 11/2018
2.0 TSI 11/2018
2.0 TSI 11/2018
2.0 TSI 11/2018
2.0 TSI 11/2018
2.0 TSI 08/2014
2.0 TSI 4motion 05/2015
1.8 TSI 02/2015
1.8 TSI 02/2015
2.0 TSI 08/2014
2.0 TSI 4motion 05/2015
2.0 TSI 4motion 09/2018

TRANSPORTER T5 Van (7HA, 7HH, 7EA, 7EH)

2.0 TSI 4motion 07/2011-08/2015
2.0 TSI 05/2011-08/2015
2.0 TSI 07/2012-08/2015

TRANSPORTER T6 / CARAVELLE T6 Bus (SGB, SGJ, SHB, SHJ)

2.0 TSI 04/2015-07/2019
2.0 TSI 4motion 06/2015-07/2019
2.0 TSI 04/2015-07/2019

TRANSPORTER T6 Van (SGA, SGH, SHA, SHH)

2.0 TSI 04/2015-07/2019
2.0 TSI 4motion 06/2015-07/2019
2.0 TSI 04/2015-07/2019

POLO V (6R1, 6C1)

1.8 GTI 11/2014-10/2017 1.8 GTI 11/2014-10/2017

TRANSPORTER T6 Platform/Chassis (SFD, SFE, SFL, SFZ, SJD, SJ

2.0 TSI 04/2015-06/2019

GOLF VII Variant (BA5, BV5)

2.0 R 4motion 03/2015-08/2020 2.0 R 4motion 03/2015-03/2017

2.0 R 4motion 03/2015-08/2020 2.0 R 4motion 12/2016-08/2020

2.0 R 4motion 12/2016-08/2020 2.0 R 4motion 12/2016-08/2020

2.0 R 4motion 12/2016-08/2020 2.0 R 4motion 12/2016-08/2020

MULTIVAN T6 (SGF, SGM, SGN, SHM, SHN)

2.0 TSI 04/2015-07/2019 2.0 TSI 4motion 06/2015-07/2019

2.0 TSI 04/2015-07/2019

GOLF ALLTRACK VII Variant (BA5, BV5)

1.8 TSI 4motion 12/2014-08/2020

POLO VI (AW1, BZ1, AE1)

2.0 GTI 11/2017 2.0 GTI 11/2017

PASSAT ALLTRACK B8 Variant (3G5, CB5)

2.0 TSI 4motion 08/2018 2.0 TSI 4motion 07/2015

2.0 TSI 4motion 11/2018 2.0 TSI 4motion 11/2018

TOURAN (5T1)

1.8 TSI 11/2015

GOLF VII Van (5G1)

2.0 GTi 04/2013-03/2017 2.0 GTi 04/2015-03/2017

CALIFORNIA T6 Camper (SGC, SGG, SHC)

2.0 TSI 04/2015-07/2019 2.0 TSI 04/2015-07/2019

2.0 TSI 4motion 06/2015-07/2019

SCIROCCO III (137, 138)

2.0 R 11/2009-11/2017 2.0 TSI 11/2013-11/2017 2.0 TSI 11/2013-11/2017

2.0 R 05/2014-11/2017

GOLF VI Convertible (517)

2.0 TSI 11/2013-05/2016

SKODA

OCTAVIA III (5E3, NL3, NR3)

2.0 TSI 4x4 02/2019-10/2020 2.0 TSI 02/2017-10/2020

2.0 TSI RS 05/2015-10/2020 1.8 TSI 11/2012-10/2020

1.8 TSI 4x4 05/2014-10/2020 2.0 TSI RS 05/2013-02/2017

2.0 TSI RS 02/2017-10/2020 2.0 TSI RS 02/2017-10/2020

2.0 TSI RS 02/2017-10/2020

OCTAVIA III Combi (5E5, 5E6)

2.0 TSI 4x4 02/2019-10/2020 2.0 TSI 02/2017-10/2020

2.0 TSI RS 11/2012-02/2017 2.0 TSI RS 05/2015-10/2020

2.0 TSI RS 02/2017-10/2020 2.0 TSI RS 02/2017-10/2020

2.0 TSI RS 02/2017-10/2020 1.8 TSI 4x4 11/2012-02/2017

1.8 TSI 11/2012-10/2020 1.8 TSI 11/2012-10/2020

SUPERB III (3V3)

2.0 TSI 4x4 03/2015 2.0 TSI 03/2015 2.0 TSI 4x4 03/2015

2.0 TSI 4x4 03/2015 2.0 TSI 07/2019 2.0 TSI 07/2019

2.0 TSI 07/2019 1.8 TSI 03/2015 1.8 TSI 03/2015

SUPERB III Estate (3V5)

2.0 TSI 4x4 03/2015 2.0 TSI 4x4 03/2015 2.0 TSI 4x4 03/2015

2.0 TSI 07/2019 2.0 TSI 07/2019 2.0 TSI 07/2019 1.8 TSI 03/2015

1.8 TSI 03/2015 2.0 TSI 03/2015

KAROQ (NU7, ND7)

2.0 TSI 4x4 04/2019 2.0 TSI 4x4 04/2019

KODIAQ I (NS6, NS7, NV7)

2.0 TSI 4x4 02/2019 2.0 TSI 4x4 02/2019 2.0 TDI 4x4 09/2016

2.0 TSI 4x4 10/2016 1.4 TSI 4x4 10/2016 1.4 TSI 10/2016

1.4 TSI 10/2016 2.0 TDI 10/2016 1.4 TSI 10/2016

2.0 TDI 4x4 10/2016 2.0 TDI 4x4 09/2016 2.0 TDI 10/2016

1.4 TSI 4x4 10/2016 1.4 TSI 10/2016 2.0 TDI 4x4 09/2016

2.0 TDI 10/2016 2.0 TDI 4x4 04/2017 2.0 TDI 4x4 06/2020

SUPERB II (3T4)

3.6 FSI 4x4 11/2008-05/2015 2.0 TDI 07/2008-05/2015

2.0 TDI 07/2008-05/2015

SUPERB II Estate (3T5)

3.6 V6 4x4 10/2009-05/2015

CUPRA

ATECA (KH7, KHP, KBP)

2.0 TSI 4Drive 09/2018 2.0 TSI 4Drive 09/2018