SINTLY

SINTLY | ALTERNATOR

XTLALT7093

VOLTAGE 12 V

OUTPUT CURRENT 43 A

APPLICATIONS For AUSTIN, BLMC, CASE IH, FORD, JAGUAR, JCB, LAND ROVER, MASSEY FE...

DIMENSIONS

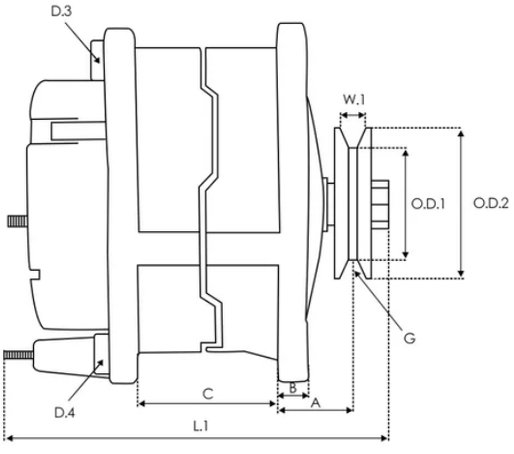

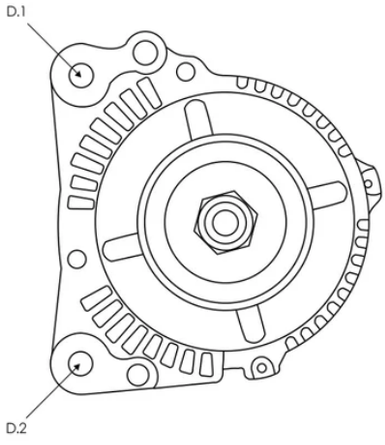

PL_3200

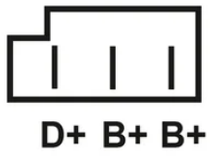

D+	Lamp
B+	Battery
B+	Battery

A 38.00 mm B 10.00 mm C 87.50 mm G 1 qty. O.D.1 39.00 mm O.D.2 63.00 mm W.1 10.50 mm D.1 M8x1.25 mm D.2 8.00 mm D.3 8.00 mm L.1 167.00 mm

OE 编号

LUCAS

23617 23622 23677 23684 23691
23693 23709 23719 23721 23737
23751 23759 23765 23766 23771
23779 23806 23808 23811 23839
23842 23848 23873 23890 23891
23893 23924 23945 23946 23983
23994 24024 24079 24099 24167
54021450 54021811 54021923 54021995

	54022040 54022081 54022082 LRA00103 LRA00109 LRA00122 LRA00132 LRA00226 LRA00356 LRA0226 LRA103 LRA226 LRA356
Other	23808 6204189 63377491 MAN /49.1

替代编码

3EFFE	ALTL226
AS-PL	UD20843A
BOSCH	0986044641 9124476005 9124476012
CARGO	110178 111185 F032110178 F032111185
CASCO	CAL25106AS CAL25106GS
CASE	92294C1
DAF	1516502R 1516520R
DIXIE	A-437
EAI	55582
ELSTOCK	28-0650
ERA	210327 210588
FORD	1504563 1537179 5003896 5007058 5007063 5010555 69EB10346AD

	703F10346AA 71BB10300AA 74DB10436A 76BB10300EA 77FB10300FA 77FB10300FB 78FB10300AA 78FB10300AB 78FB10300BC 81AB10300SA 81AB10300VB 81GB10300AA 873F10300AAA D2000E10346A R78FB10346AC
GHIBAUDI	AG0239
HC PARTS	CA18H
JAGUAR	281742 C37221
KUHNER	3018L
LESTER	12152
LOGISTIK	442321
MASSEY FERGUSON	3637261R91 3638512R91 36388131R1 3688131R1
MAZDA	32030760
MITSUBISHI	AH2140B14
PERKINS	23737R 2871609 2871611 2871613 2871615 2871619 2871A101 2871A102 2871A102T 2871A103 2871A105 2871A107 2871A116 2871A118 2871A120 2871A122 2871A131 2871A132 2871A134 2871A136 2873179
POWERMAX	89212140

REAL	20105601BN 20105601OE
RENAULT	6005003145 6005007750 6005700083 7700010614 7700017032 7701028801
ROLLCO	ALT114
ROVER	ADU1991 ADU5440 ADU5444 GEU205 GEU207 GEU211 GEU2211 GXE2211 GXE8211 PRC2667 PRC4285
SANDO	2025106.0 2025106.1
SCANIA	1439958
SIDAT	A12LU0058A2
SIOM	ALT271150 ALT3600 ALT3610 ALT3650
STARDAX	STX100159 STX100290 STX100290R STX100997 STX101517 STX101545 STX110214 STX110214R
VALEO	432863 436144
WAI	12041N
WOODAUTO	ALT16003

适用车型

AUSTIN

PRINCESS

2200 HLS 04/1976-09/1978 1800 HL 04/1976-09/1978

PRINCESS 2

2200 10/1978-10/1982 1700 10/1978-10/1982 2000 10/1978-10/1982

METRO I Fastback (XF)

1.0 10/1980-04/1990 1.3 10/1980-12/1985 1.0 Surf HLE 10/1980-04/1990

1.3 Turbo 10/1983-04/1990 1.0 Surf HLE 10/1980-04/1990

1.3 10/1980-04/1990 1.3 L, HLE, S 10/1980-04/1990

1.3 Surf 11/1985-04/1990

ALLEGRO I Hatchback (ADO 67)

1.1 05/1973-10/1981 1.3 05/1973-03/1982 1.5 Super 05/1973-03/1982

1.3 01/1975-10/1979 1.3 01/1979-10/1983 1750 01/1975-10/1979

1.1 01/1975-10/1979

MINI II

1000 Mayfair Sport 09/1988-06/1993 1275 GT 10/1969-08/1980

1000 Mayfair 08/1982-06/1993 1000 10/1967-09/1984

1000 Mayfair 08/1982-06/1993 1100 Special 01/1976-08/1981

1000 Mayfair 08/1982-06/1993 1000 10/1967-09/1984

MAXI I Fastback

1500 04/1969-07/1980 1750 04/1969-10/1980 1750 HL 10/1972-10/1980

1000-Series MK II

1300 01/1970-12/1974 1100 01/1970-12/1974 1300 GT 01/1970-12/1974

MINI I

850 06/1959-08/1969

ALLEGRO I Estate (ADO 67)

1.7 08/1979-03/1982 1.5 08/1975-03/1982 1.3 08/1975-03/1982

ALLEGRO I Saloon

1.0 01/1980-10/1983 1.3 12/1979-12/1984

MAXI II Fastback

1750 10/1980-12/1982

BLMC

Princess 2200

2.2 01/1976-12/1981

Mini 850

0.8 01/1972-12/1980

Princess 1800

1.8 01/1976-12/1981

Allegro 1750

1.7 01/1981-12/1983

Maxi 1500

1.5 01/1973-12/1982

Austin 2200

2.2 01/1972-12/1976

Allegro 1500

1.5 01/1981-12/1983

Marina 1700

1.7 01/1974-12/1980

Maxi 1750

1.7 01/1973-12/1982

Marina 1800

1.8 01/1974-12/1980

Princess 2000

2.0 01/1976-12/1981

Austin 1800

1.8 01/1972-12/1976

Mini 1000

1.0 01/1970-12/1993

Allegro 1100

1.1 01/1973-12/1983

Allegro 1300

1.3 01/1973-12/1983

Mini 1275

1.3 01/1970-12/1982

JCB

2DS Loader 01/1971 2D Loader 3C Loader 01/1971

3D Loader 01/1971 3C Loader 01/1972 4D Loader 01/1969-12/1980

3D Loader 01/1972

805 Excavator

4.1 01/1976-12/1978 6.2 01/1976-12/1978

525-4 Loadall

3.9 01/1982-12/1983

520 Loadall

3.8 01/1975-12/1981

807B Excavator

5.8 01/1976-12/1982 6.2 01/1976-12/1982

806B Excavator

5.8 01/1976-12/1982 6.2 01/1976-12/1982

808 Excavator

5.8 01/1975-12/1982

110 Excavator

4.1 01/1971-12/1975

807 Excavator

5.8 01/1973-12/1982

806 Excavator

4.1 01/1973-12/1982

410 Loader

3.9 01/1982-12/1985

413 Loader

5.8 01/1973-12/1983

NEW HOLLAND

8040 01/1985 8030 01/1985

CASE IH

1390 01/1983-12/1984 1194 01/1984-12/1985 1294 01/1984-12/1985

485 01/1982

1394

3.6 01/1984-12/1988

1494

3.6 01/1984-12/1988

MASSEY FERGUSON

1200 01/1973-12/1980 154 01/1983-12/1989

JAGUAR

XJ

6 4.2 11/1973-01/1980 6 4.2 01/1975-12/1979 6 3.4 05/1975-10/1986

TRIUMPH

TR 7 II

2.0 05/1979-12/1981

TR 7 I Coupe

2.0 (TCG1, TICG, TCW) 01/1975-12/1981

TR 6 I

2.5 01/1972-12/1976

SPITFIRE 1500 (FM)

1500 01/1975-01/1980

SPITFIRE MK IV (FD)

1.3 01/1971-12/1972

MORRIS

MARINA

1800 HL 03/1975-10/1978 1800 GT 03/1975-10/1978

1800 03/1975-10/1978 1.8 04/1971-12/1979 1300 04/1971-06/1975

1.8 TC 04/1971-09/1975

MARINA II Station Wagon

1800 10/1975-10/1978 1300 03/1978-10/1980

MARINA II Saloon

1800 10/1975-09/1978 1300 10/1975-09/1978

MARINA Station Wagon

1800 04/1971-10/1975

MARINA Coupe

1300 04/1971-06/1980 1800 TC 04/1971-12/1975 1800 04/1971-12/1975

MARINA III Estate

1.7 11/1978-06/1980 1.3 10/1978-10/1980

MARINA III

1.7 11/1978-06/1980 1,3 10/1978-10/1980

ITAL

1.3 07/1980-03/1984 1.7 07/1980-03/1984

ITAL Station Wagon

1.7 07/1980-03/1984 1.3 07/1980-03/1984

ROVER

MINI Hatchback

1.3 Cooper Works 03/1999-08/2000 1300 05/1996-10/1996

1300 04/1992-10/1996 1300 04/1992-10/1996 1300 01/1991-12/1991

2000-3500 (P6)

2200 (TC) 10/1973-05/1976

2000-3500 Hatchback (SD1)

3500 06/1976-10/1986 3500 06/1976-10/1986

LAND ROVER

90 I (LDV)

2.5 4x4 09/1985-08/1990

88/109 MK III Closed Off-Road Vehicle

2.3 4x4 11/1971-12/1986
2.3 D 4x4 11/1971-12/1986
2.3 4x4 11/1971-12/1986
2.3 D 4x4 11/1971-12/1986
2.3 4x4 11/1971-12/1986

88/109 MK III Open Off-Road Vehicle

2.3 D 4x4 11/1971-10/1985
2.3 4x4 11/1971-10/1985
2.3 4x4 11/1971-10/1985
2.3 D 4x4 11/1971-10/1985
2.3 4x4 11/1971-10/1985

FORD

ESCORT II (ATH)

1.3 12/1974-08/1980
1.3 12/1974-08/1980
1.1 06/1975-08/1980
1.3 03/1979-08/1980
1.1 12/1974-08/1980
1.3 12/1974-08/1980
1.1 12/1974-08/1980

TRANSIT Bus (72E, 73E)

1.7 FT 100 (72E2A) 04/1971-03/1978
2.3 D FT 100 (72E2X) 11/1971-09/1978
1.5 1000 (72E2A) 12/1968-05/1973
1.7 (72E3C) 01/1971-05/1973
1.7 1000 (72E2A) 01/1971-05/1973
1.7 1300 (820000) 01/1966-05/1973

ESCORT I (AFH, ATH)

1100 01/1968-12/1974 1100 06/1968-06/1971 1100 06/1970-02/1976

1100 06/1968-06/1971 1300 09/1973-02/1976 1300 06/1970-02/1976

1300 06/1970-02/1976

ESCORT II Turnier

1.3 (CADR) 04/1975-01/1979 1.3 (BADR) 08/1976-07/1981

TRANSIT Van (72E, 71E)

1.5 (72E1A) 01/1971-05/1973 1.7 FT 100 04/1971-03/1978

ESCORT I Turnier (ADH)

1100 06/1970-02/1976 1300 06/1970-02/1976 1100 06/1970-02/1976

CAPRI I (ECJ)

1300 12/1968-12/1972 1300 01/1971-12/1972

TRANSIT Van (81E)

1.7 1300 Feuerw. (810000) 11/1965-05/1973

1.7 1300 (81E4SA) 03/1967-07/1973

TRANSIT Platform/Chassis (V_ _)

2.4 D (VGL, VSL, VTL, VCS, VDS) 01/1978-12/1985

TRANSIT Platform/Chassis (74E)

1.5 01/1971-05/1973 1.7 FT 100 04/1971-03/1978

CORTINA Estate

1300 10/1970-03/1972 1600 10/1970-03/1972 1600 01/1970-03/1972

CORTINA

1300 10/1970-03/1972 1600 01/1970-03/1972 1600 GT 10/1970-03/1972

1600 10/1970-03/1972

CORTINA Coupe

1300 10/1970-03/1972 1600 GT 10/1970-03/1972 1600 10/1970-03/1972

MG

MGB GT

1.8 (D3) 07/1965-11/1980 1.8 (D3, GHD5L) 07/1965-11/1980

1.8 (D3, GHD5L) 07/1965-11/1980 1.8 (D3, GHD5L) 07/1965-11/1980

1.8 (D3, GHD5L) 07/1965-11/1980

MIDGET

1.5 09/1974-12/1979

MGB Convertible

1.8 (N3) 05/1962-12/1980 1.8 06/1962-01/1980 1.8 06/1962-01/1980

1.8 06/1962-01/1980 1.8 06/1962-01/1980 1.8 06/1962-01/1980

METRO

1300 05/1982-09/1990

TALBOT

SIMCA SUNBEAM

1.3 07/1977-04/1981 1.6 10/1978-04/1981

VAUXHALL

CHEVETTE Hatchback

1300 03/1975-12/1985

VIVA

1256 (HC) 10/1971-10/1975 1300 (HC) 10/1975-10/1979