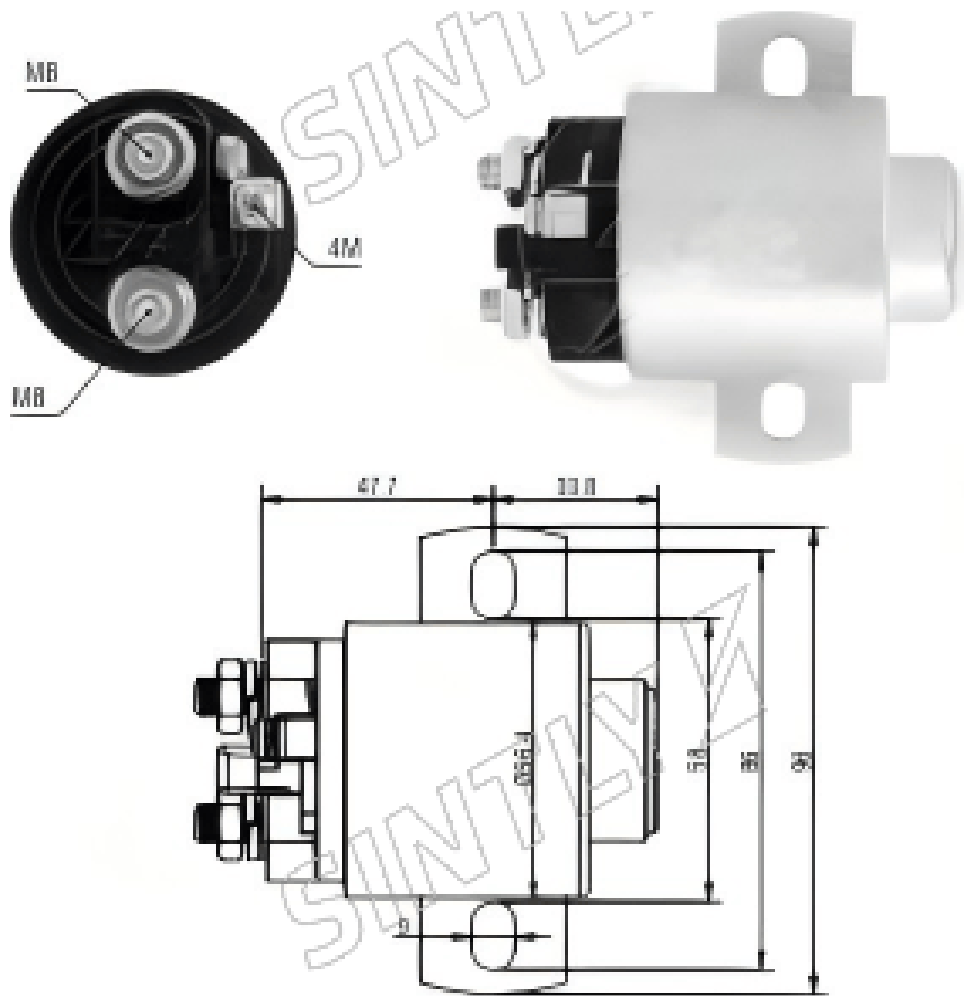

产品规格

规格	参数值
Voltage	12 V
CLAMP: B+	M8
CLAMP: MOTOR	M8
CLAMP: S	M4 Hole
new	11/2008
weight	0.868 kg

适用车型

品牌	车辆	车型
ASHOK LAYLAND	for truck Grid Heater	with 12V system
FORD	Para Grid Heater de caminhões Cargo	com sistema 12V
FORD	Para Grid Heater de caminhões Cargo	with 12V system
FREIGHTLINER	for truck Grid Heater	with 12V system
STERLING	for truck Grid Heater	with 12V system
VOLKSWAGEN	for truck Grid Heater	with 12V system
VOLKSWAGEN	para Grid Heater de-caminhões	com sistema 12V

原厂编码

9.330.080.010	9.33A.080.010

替代编码 (汽车制造商)

9.330.080.010 (BOSCH)	9.33A.080.010 (BOSCH)