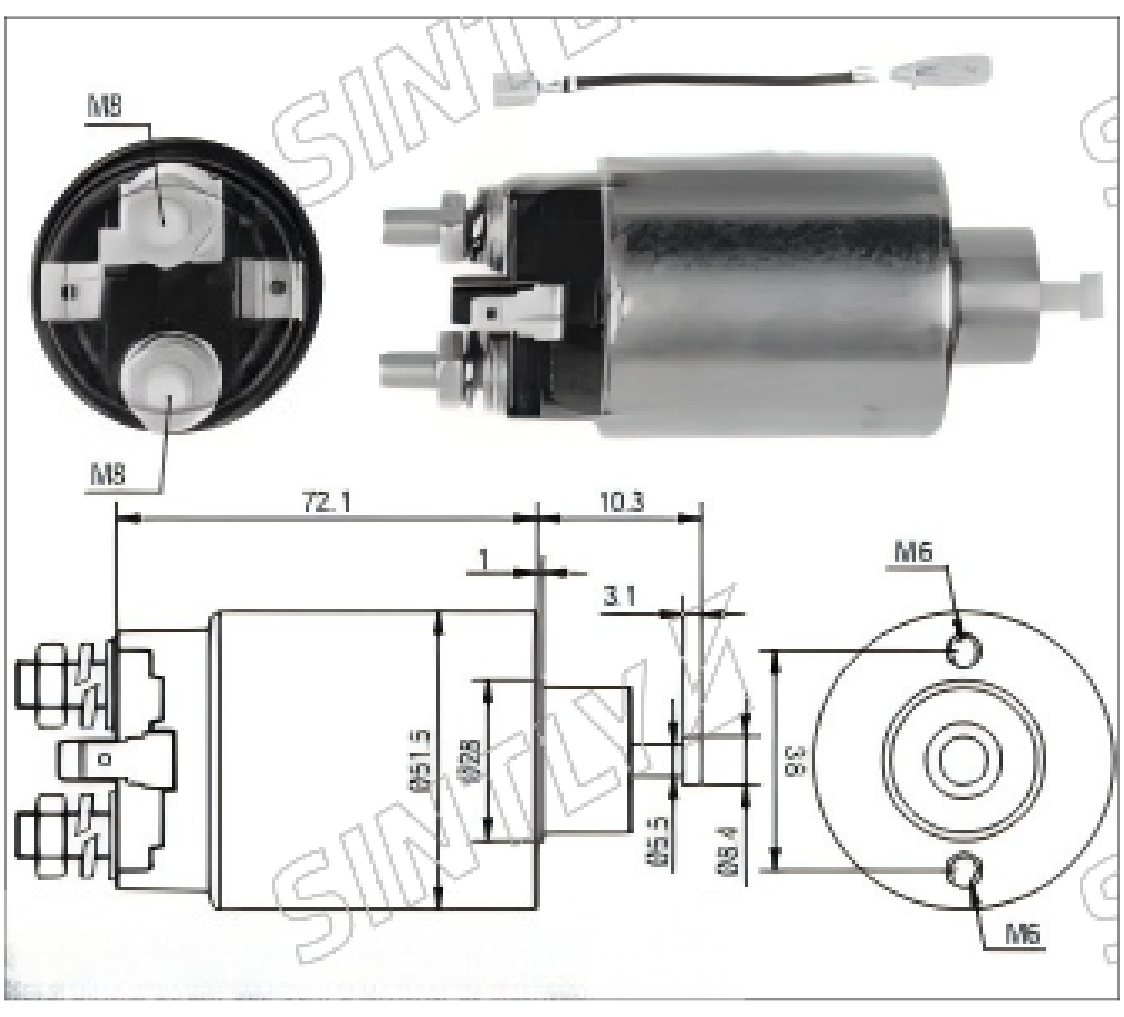

产品规格

规格	参数值
Voltage	12 V
CLAMP: B+	M8
CLAMP: MOTOR	M8
CLAMP: S	Male Spade
weight	0.645 kg

适用车型

品牌	车辆	车型	起始年份	截止年份
HYUNDAI	Accent	1.3L	01/1995	
HYUNDAI	Elantra	1.6L 16V (DOHC)	01/1991	01/1994
HYUNDAI	Elantra	1.8L 16V (DOHC)	01/1991	01/1994
HYUNDAI	H100	2.4L	01/1994	
HYUNDAI	Pony	1.2L	01/1978	01/1985
HYUNDAI	Pony	1.4L	01/1978	01/1985
HYUNDAI	Pony	mk1 1.3 L	01/1982	01/1986
HYUNDAI	Porter	2.4L	01/1997	
HYUNDAI	Sonata	1.8L	01/1986	01/1998
HYUNDAI	Sonata	2.0L	01/1986	01/1998
MITSUBISHI	Celeste	1400	01/1975	01/1980
MITSUBISHI	Celeste	1600	01/1975	01/1980
MITSUBISHI	Celeste	1600 with 4G32 engine	01/1979	01/1982
MITSUBISHI	Colt	1.2	01/1978	01/1987
MITSUBISHI	Colt	1.3 with G13B engine	01/1986	01/1988
MITSUBISHI	Colt	1.4 with 4G12 engine	01/1980	01/1983
MITSUBISHI	Colt	1.6i 4WD with 4G92 engine	01/1991	01/1992
MITSUBISHI	Colt	1.6i with 4G92 engine	01/1991	01/1992
MITSUBISHI	Colt	1.8 GTi with 4G67 engine	01/1989	01/1992
MITSUBISHI	Colt	1.8 GTi with 4G93 engine	01/1991	01/1992
MITSUBISHI	Eclipse	2.0i 16V with 4G63 engine	01/1991	
MITSUBISHI	Galant	1.6 with 4G32 engine	01/1987	01/1991
MITSUBISHI	Galant	1.8 with 4G37 engine	01/1990	
MITSUBISHI	Galant	1600	01/1975	01/1987
MITSUBISHI	Galant	1850	01/1975	01/1987
MITSUBISHI	Galant	2.0 4WD	01/1922	
MITSUBISHI	Galant	2.0 4WD AT	01/1922	
MITSUBISHI	Galant	2.0 AT	01/1986	01/1987
MITSUBISHI	Galant	2.0i	01/1987	01/1992
MITSUBISHI	Galant	2.4i	01/1986	
MITSUBISHI	L 200	Cold Climate	01/1981	
MITSUBISHI	L 300	1.6 with 4G32 engine	01/1979	01/1990
MITSUBISHI	L 300	2.0	01/1986	01/1990
MITSUBISHI	L 300	2.4	01/1991	
MITSUBISHI	Lancer	1.2 with 4G16 engine	01/1983	01/1987
MITSUBISHI	Lancer	1.3 with G13B engine	01/1986	01/1988
MITSUBISHI	Lancer	1.4 with 4G12 engine	01/1980	01/1983
MITSUBISHI	Lancer	1.5 with 4G15 engine	01/1983	01/1988
MITSUBISHI	Lancer	1.6 with 4G32 engine	01/1975	01/1983
MITSUBISHI	Lancer	1.8 GTi with 4G61 engine	01/1988	01/1991
MITSUBISHI	Lancer	1200	01/1975	01/1983
MITSUBISHI	Lancer	1400	01/1975	01/1983
MITSUBISHI	Lancer	1600	01/1975	01/1983
MITSUBISHI	Pajero	2.0	01/1982	
MITSUBISHI	Pajero	2.6	01/1986	
MITSUBISHI	Sapporo	1600	01/1976	01/1984
MITSUBISHI	Sapporo	2000	01/1976	01/1984
MITSUBISHI	Sapporo	2000i Turbo	01/1976	01/1984
MITSUBISHI	Space	Gear 2.0i AT	01/1995	01/1996
MITSUBISHI	Space	Gear 2.4i with 4G64 engine	01/1995	01/1996
MITSUBISHI	Space	Wagon 1.8	01/1987	01/1991
MITSUBISHI	Space	Wagon 1.8 with 4G93 engine	01/1991	
MITSUBISHI	Space	Wagon 2.0	01/1987	01/1991
MITSUBISHI	Space	Wagon 2.0 AT	01/1992	
MITSUBISHI	Space	Wagon 2.4 AT	01/1992	
MITSUBISHI	Space	Wagon 2.4 with 4G64 engine	01/1992	
MITSUBISHI	Starion	2.6i	01/1989	
MITSUBISHI	Starion	2000i Turbo	01/1982	01/1988

原厂编码

M371X60171	MD607889
MD618728	SB601

替代编码 (汽车制造商)

M371X60171 (MITSUBISHI)	MD607889 (MITSUBISHI)
MD618728 (MITSUBISHI)	SB601 (MITSUBISHI)