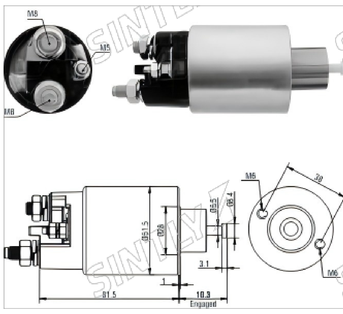

产品规格

规格	参数值
Voltage	12 V
CLAMP: B+	M8
CLAMP: MOTOR	M8
CLAMP: S	M5 Post
new	03/2009
weight	0.645 kg

适用车型

品牌	车辆	车型	起始年份	截止年份
CITROËN	AX	11 ZA 4X4	01/1991	01/1992
CITROËN	Berlingo	1.1i MF	01/1996	
CITROËN	Berlingo	1.1i MFHDZ	01/1996	
CITROËN	Berlingo	1.4i MF	01/1996	
CITROËN	Berlingo	1.4i MFHDZ	01/1996	
CITROËN	Berlingo	Furgon 1.4i M	01/1996	
CITROËN	Berlingo	Furgon 1.4i MBKFX	01/1996	
CITROËN	Berlingo	Furgon 1.6 16V MF	01/2000	
CITROËN	Berlingo	Furgon 1.6 16V MFNFU	01/2000	
CITROËN	C2	1.1 with JM engine	01/2003	
CITROËN	C2	1.4 with JM engine	01/2003	
CITROËN	C2	1.6 with JM engine	01/2003	
CITROËN	C3	1.1i with FC engine	01/2002	
CITROËN	C3	1.4 16V with FC engine	01/2003	
CITROËN	C3	1.4i Bivalent with FC engine	01/2002	
CITROËN	C3	1.6 16V with FC engine	01/2002	
CITROËN	C3	Pluriel 1.4 with HB engine	01/2003	
CITROËN	C3	Pluriel 1.6 with HB engine	01/2003	
CITROËN	C4	1.4 16V with LC engine	01/2004	
CITROËN	C4	1.6 16V with LC engine	01/2004	
CITROËN	C4	Coupé 1.4 16V with LA engine	01/2004	
CITROËN	C4	Coupé 1.6 16V with LA engine	01/2004	
CITROËN	Saxo	1.0 X with S0 engine	01/1996	01/1998
CITROËN	Saxo	1.0 X with S0 engine	01/1998	01/2003
CITROËN	Saxo	1.0 X with S1 engine	01/1996	01/1998
CITROËN	Saxo	1.0 X with S1 engine	01/1998	01/2003
CITROËN	Saxo	1.1 SX with S0 engine	01/1996	01/2003
CITROËN	Saxo	1.1 SX with S1 engine	01/1996	01/2003
CITROËN	Saxo	1.4 VTS with S1 engine	01/1996	01/2003
CITROËN	Saxo	1.4 VTS with SO engine	01/1996	01/2003
CITROËN	Xsara	1.4i Coupe with N0 engine	01/1998	01/2005
CITROËN	Xsara	1.4i with N1 engine	01/1997	01/2005
CITROËN	Xsara	1.6 16V Coupe with N0 engine	01/2000	01/2005
CITROËN	Xsara	1.6 16V with N1 engine	01/2000	01/2005
CITROËN	Xsara	1.6i Coupe with N0 engine	01/1998	01/2000
CITROËN	Xsara	1.6i with N1 engine	01/1997	01/2000
CITROËN	Xsara	Break 1.4i with N2 engine	01/1997	01/2005
CITROËN	Xsara	Break 1.6 16V with N2 engine	01/2000	01/2005
CITROËN	Xsara	Break 1.6i with N2 engine	01/1997	01/2000
CITROËN	Xsara	Picasso 1.6 with N68 engine	01/2000	
DACIA	Logan		01/2004	
PEUGEOT	106	II 1.0i	01/2000	
PEUGEOT	106	II 1.1i	01/1996	
PEUGEOT	106	II 1.4i	01/1996	
PEUGEOT	106	II 1.6 S16	01/1996	
PEUGEOT	106	II 1.6i	01/1996	
PEUGEOT	206	CC 1.6 16V with 2D engine	01/2000	
PEUGEOT	206	Fastback 1.1i with 2A/C engine	01/1998	
PEUGEOT	206	Fastback 1.4 16V with 2A/C engine	01/2003	
PEUGEOT	206	Fastback 1.4i with 2A/C engine	01/1998	
PEUGEOT	206	Fastback 1.6 16V with 2A/C engine	01/2000	
PEUGEOT	206	Fastback 1.6i with 2A/C engine	01/1998	
PEUGEOT	206	SW 1.1with 2E/K engine	01/2002	
PEUGEOT	206	SW 1.4 16V with 2E/K engine	01/2003	
PEUGEOT	206	SW 1.4 with 2E/K engine	01/2002	
PEUGEOT	307	1.4 16V with 3A/C engine	01/2003	
PEUGEOT	307	1.4 with 3A/C engine	01/2000	
PEUGEOT	307	1.6 16V with 3A/C engine	01/2000	
PEUGEOT	307	Break 1.6 16V with 3E engine	01/2002	
PEUGEOT	307	SW 1.4 16V with 3H engine	01/2003	
PEUGEOT	307	SW 1.6 16V with 3H engine	01/2003	
PEUGEOT	Partner	1.6L 16V Combispace with 5F engine	01/2001	01/2002
RENAULT	Kangoo		01/2008	
RENAULT	Logan		01/2004	
RENAULT	Sandero		01/2009	

原厂编码

7M. 993	M000T20871
M000T20872	M0T20872
MOT20871	MOT80082