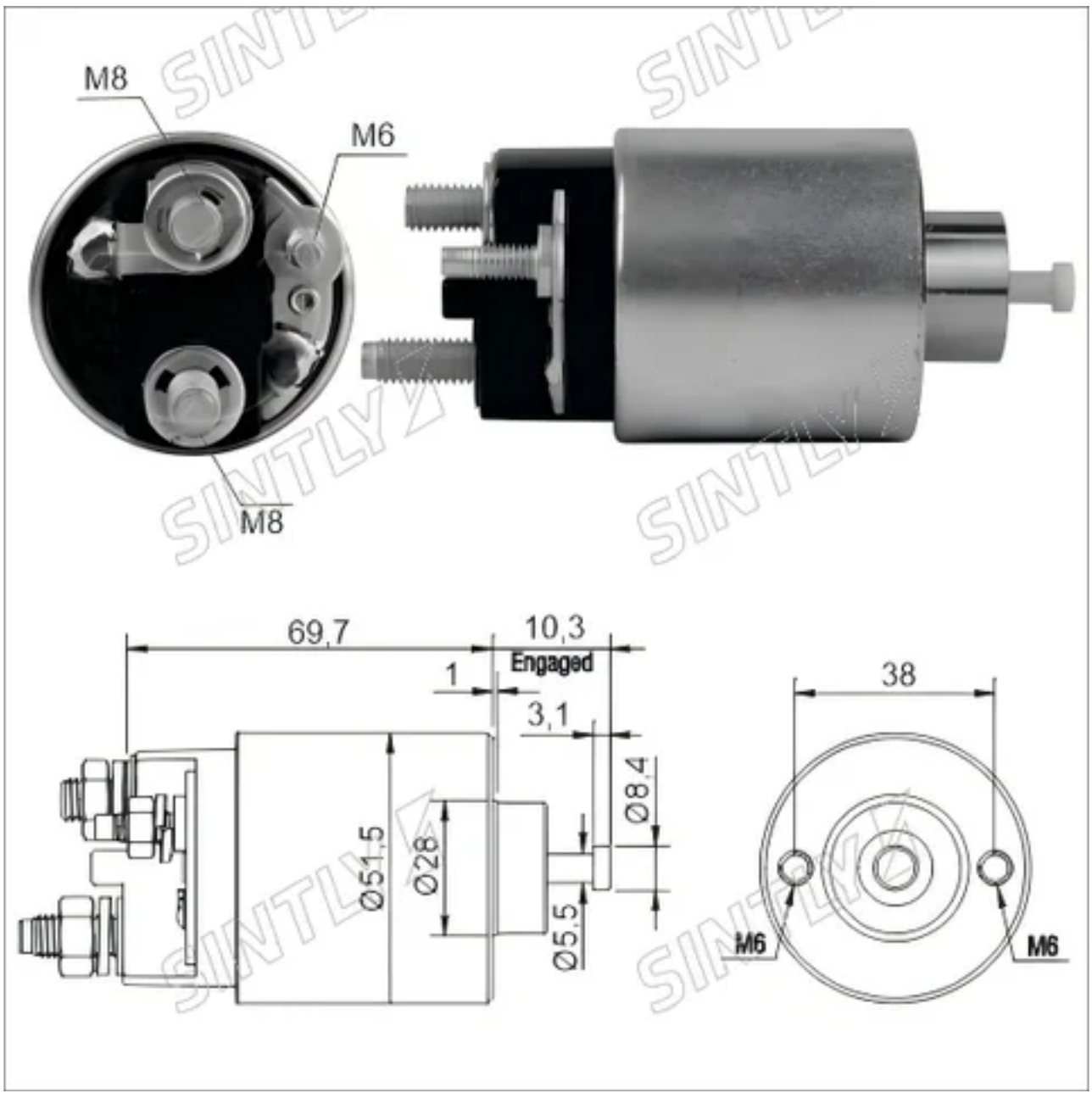

替代编码

WAI	66-83103

适用车型

FORD

- Expedition 3.5 L V6 01/2015-01/2015
- F150 3.5 L 01/2011-01/2015
- F150 3.7 L 01/2011-01/2014
- Mustang 3.7 L 01/2012-01/2014
- Mustang 5.0 L 01/2015-01/2015
- Mustang Shelby GT500 5.8L 01/2013
- Transit 150 3.5L V6 01/2015-01/2016
- Transit 150 3.7L V6 01/2015-01/2016
- Transit 250 3.5L V6 01/2015-01/2016
- Transit 250 3.7L V6 01/2015-01/2016
- Transit 350 3.5L V6 01/2015-01/2016
- Transit 350 3.7L V6 01/2015-01/2016
- Transit 350 HD 3.5L V6 01/2015-01/2016
- Transit 350 HD 3.7L V6 01/2015-01/2016

LINCOLN

- Navigator 3.5 L V6 01/2015-01/2015