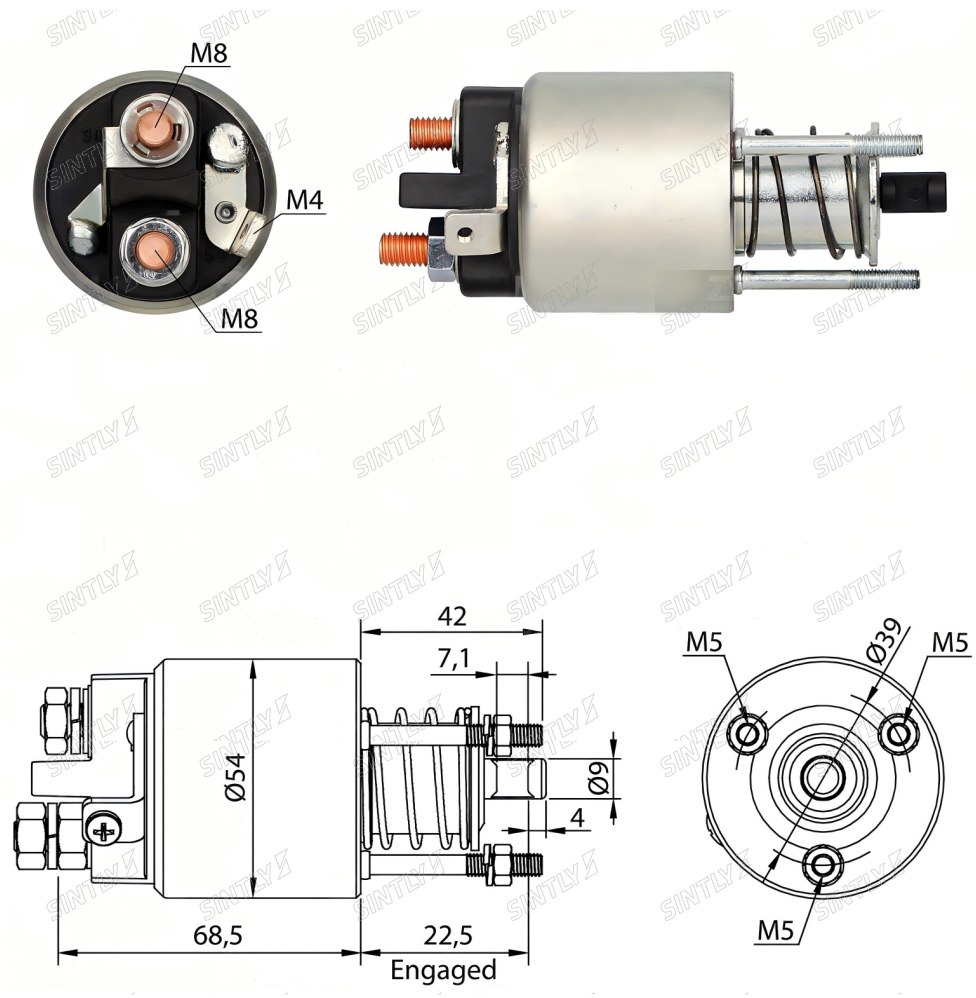

产品规格

规格	参数值
Voltage	12 V
CLAMP: B+	M8
CLAMP: MOTOR	M8
CLAMP: S	M4 Hole
weight	0.654 kg

适用车型

品牌	车辆	车型	起始年份
OPEL	Astra	G Estate 1.7 CDTI with Z 17 DTL engine	01/2003
OPEL	Astra	G Estate 1.7 DTI 16V with Y 17 DT engine	01/2000
OPEL	Astra	G Hatchback 1.7 CDTI with Z 17 DTL engine	01/2003
OPEL	Astra	G Hatchback 1.7 DTI 16V with Y 17 DT engine	01/2000
OPEL	Astra	G Saloon 1.7 DTI 16V with Y 17 DT engine	01/2000
OPEL	Astra	H 1.7 DTI with Z 17 DTH engine	01/2004
OPEL	Astra	H 1.7 DTI with Z 17 DTL engine	01/2004
OPEL	Astra	H Estate 1.7 DTI with Z 17 DTH engine	01/2004
OPEL	Astra	H Estate 1.7 DTI with Z 17 DTL engine	01/2004
OPEL	Astra	H GTC 1.7 CDTi with Z 17 DTH engine	01/2005
OPEL	Combo	Box Body / Estete 1.7 DI 16V with Y 17 DTL engine	01/2001
OPEL	Combo	Box Body / Estete 1.7 DTI 16V with Y 17 DT engine	01/2001
OPEL	Combo	Tour 1.7 DI 16V with Y 17 DTL engine	01/2001
OPEL	Combo	Tour 1.7 DTI 16V with Y 17 DT engine	01/2001
OPEL	Corsa	C 1.3 CDTI with Z 13 DT engine	01/2003
OPEL	Corsa	C 1.7 CDTI with Z 17 DTH engine	01/2003
OPEL	Corsa	C 1.7 DI with Y 17 DTL engine	01/2000
OPEL	Corsa	C 1.7 DTI with Y 17 DT engine	01/2000
OPEL	Corsa	C Box 1.7 DI 16V with Y 17 DTL engine	01/2000
OPEL	Corsa	C Box 1.7 DTI 16V with Y 17 DT engine	01/2000
OPEL	Meriva	1.7 CDTI with Z 17 DTH engine	01/2003
OPEL	Meriva	1.7 DTI with Y 17 DT engine	01/2003
VAUXHALL	Astra	Mk IV 1.7L CDTI 16V Estate with Z 17 DTL engine	01/2003
VAUXHALL	Astra	Mk IV 1.7L CDTI 16V Hatchback with Z 17 DTL engine	01/2003
VAUXHALL	Astra	Mk IV 1.7L CDTI 16V with Z 17 DTL engine	01/2003
VAUXHALL	Astra	Mk IV 1.7L DTI 16V Estate with Y 17 DT engine	01/2000
VAUXHALL	Astra	Mk IV 1.7L DTI 16V Hatchback with Y 17 DT engine	01/2000
VAUXHALL	Astra	Mk IV 1.7L DTI 16V with Y 17 DT engine	01/2000
VAUXHALL	Astra	Mk V 1.7L CDTI Hatchback with Z 17 DTH engine	01/2004
VAUXHALL	Astravan	Mk IV 1.7 CDTI with Z 17 DTL engine	01/2004
VAUXHALL	Combo	1.7 DI 16V with Y 17 DTL engine	01/2001
VAUXHALL	Combo	1.7 DTI 16V with Y 17 DT engine	01/2001
VAUXHALL	Corsa	II 1.3 CDTI 16V	01/2004
VAUXHALL	Corsa	II 1.7 CDTI 16V with Z 17 DTH engine	01/2004
VAUXHALL	Corsa	II 1.7 DI 16V with Y 17 DTL engine	01/2000
VAUXHALL	Corsa	II 1.7 DTI 16V with Y 17 DT engine	01/2000
VAUXHALL	Corsavan	Mk II 1.3 CDTI 16V with Z 13 DT engine	01/2004
VAUXHALL	Corsavan	Mk II 1.7 DI 16V with Y 17 DTL engine	01/2000
VAUXHALL	Corsavan	Mk II 1.7 DTI 16V with Y 17 DT engine	01/2000
VAUXHALL	Meriva	Mk II 173 CDTI 16V with Z 17 DTH engine	01/2004