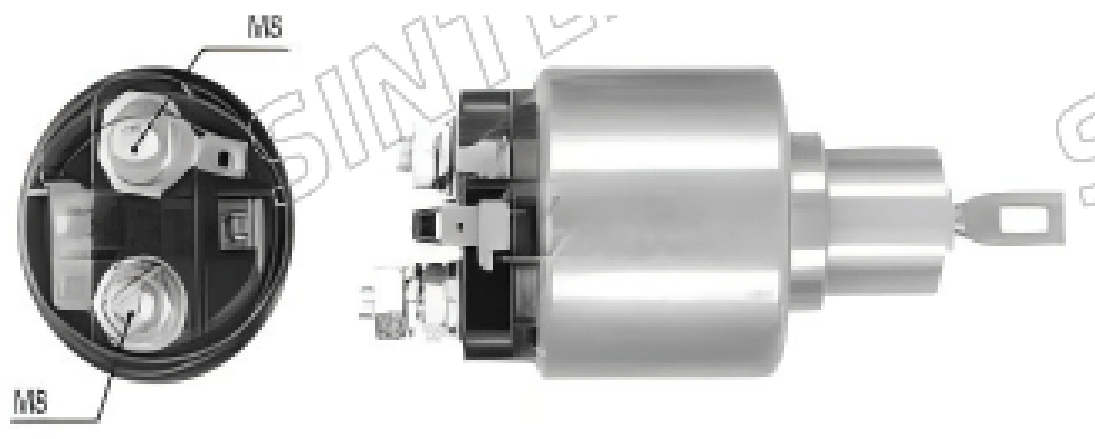

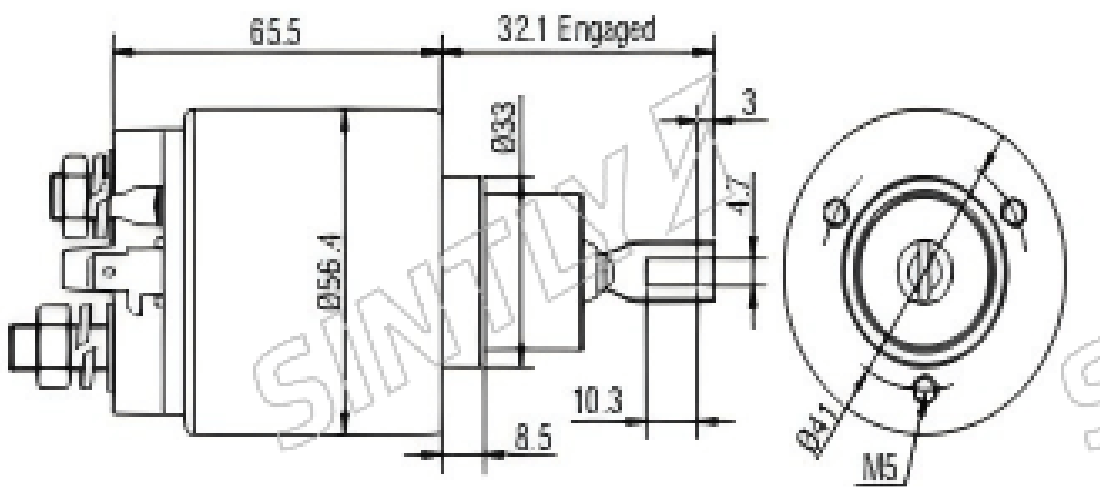

产品规格

规格	参数值
Voltage	12 V
CLAMP: B+	M8
CLAMP: MOTOR	M8
CLAMP: S	Male Spade
CLAMP: R	Male Spade
weight	0.797 kg

适用车型

品牌	车辆	车型	起始年份	截止年份
AUDI	A6	4.2L Quattro with ARS engine	01/1998	
AUDI	A6	4.2L Quattro Avant with ARS engine	01/1998	
AUDI	A6	4.2L Quattro Avant with ASG engine	01/1998	
AUDI	A6	4.2L Quattro Avant with AWN engine	01/1998	
AUDI	A6	4.2L Quattro with ASG engine	01/1998	
AUDI	A6	S6 Quattro Avant with ANK engine	01/1999	
AUDI	A6	S6 Quattro Avant with AQJ engine	01/1999	
AUDI	A6	S6 Quattro with ANK engine	01/1999	
AUDI	A6	S6 Quattro with AQJ engine	01/1999	
AUDI	A8	3.7 Quattro with AEW engine	01/1995	01/1998
AUDI	A8	3.7 Quattro with AKC engine	01/1998	01/2002
AUDI	A8	3.7 Quattro with AKJ engine	01/1995	01/1998
AUDI	A8	3.7 Quattro with AQG engine	01/1998	01/2002
AUDI	A8	3.7 with AEW engine	01/1995	01/1998
AUDI	A8	3.7 with AKC engine	01/1998	01/2002
AUDI	A8	3.7 with AQG engine	01/1998	01/2002
AUDI	A8	4.2 Quattro with ABZ engine	01/1994	01/1998
AUDI	A8	4.2 Quattro with AEM engine	01/1994	01/1996
AUDI	A8	4.2 Quattro with AKG engine	01/1994	01/1998
AUDI	A8	4.2 Quattro with AQF engine	01/1998	01/2002
AUDI	A8	4.2 Quattro with ARU engine	01/1999	01/2000
AUDI	A8	4.2 Quattro with AUW engine	01/1998	01/2002
AUDI	A8	4.2 Quattro with AUX engine	01/1998	01/2002
AUDI	A8	S8 Quattro with AHC engine	01/1996	01/1999
AUDI	A8	S8 Quattro with AKH engine	01/1996	01/1999
AUDI	A8	S8 Quattro with AQH engine	01/1999	01/2002
AUDI	A8	S8 Quattro with AVP engine	01/1999	01/2002
FORD	Escort	1.6	01/1992	
FORD	Escort	1.6i	01/1994	01/1996
FORD	Escort	1.8	01/1992	
FORD	Escort	1.8i	01/1994	01/1996
FORD	Escort	2.0i	01/1993	
FORD	Escort	Hobby	01/1993	
FORD	Escort	XR3 2.0i	01/1992	01/1996
FORD	Verona	1.6 CHT	01/1992	
FORD	Verona	1.8i	01/1994	01/1995
FORD	Verona	2.0i	01/1993	
SEAT	Inca	1.6 EFi	01/1998	01/2001
VOLKSWA-GEN	Gol	I 1.6	01/1993	
VOLKSWA-GEN	Logus	1.6	01/1993	01/1994
VOLKSWA-GEN	Logus	1.6i	01/1994	01/1996
VOLKSWA-GEN	Logus	1.8	01/1992	01/1994
VOLKSWA-GEN	Logus	1.8i	01/1994	01/1996
VOLKSWA-GEN	Logus	2.0	01/1992	01/1994
VOLKSWA-GEN	Logus	2.0i	01/1992	01/1996
VOLKSWA-GEN	Pointer	1.8	01/1993	01/1994
VOLKSWA-GEN	Pointer	1.8i	01/1994	01/1996
VOLKSWA-GEN	Pointer	2.0	01/1993	01/1996
VOLKSWA-GEN	Polo Classic	1.6 Mi	01/1996	01/1998
VOLKSWA-GEN	Polo Classic	1.8 Mi	01/1996	
VOLKSWA-GEN	Van	1.6 Mi	01/1998	

原厂编码

0.331.303.094	9.330.081.050
9.33A.081.050	66-9126-1

替代编码 (汽车制造商)

0.331.303.094 (BOSCH)	9.330.081.050 (BOSCH)
9.33A.081.050 (BOSCH)	66-9126-1 (WAI)