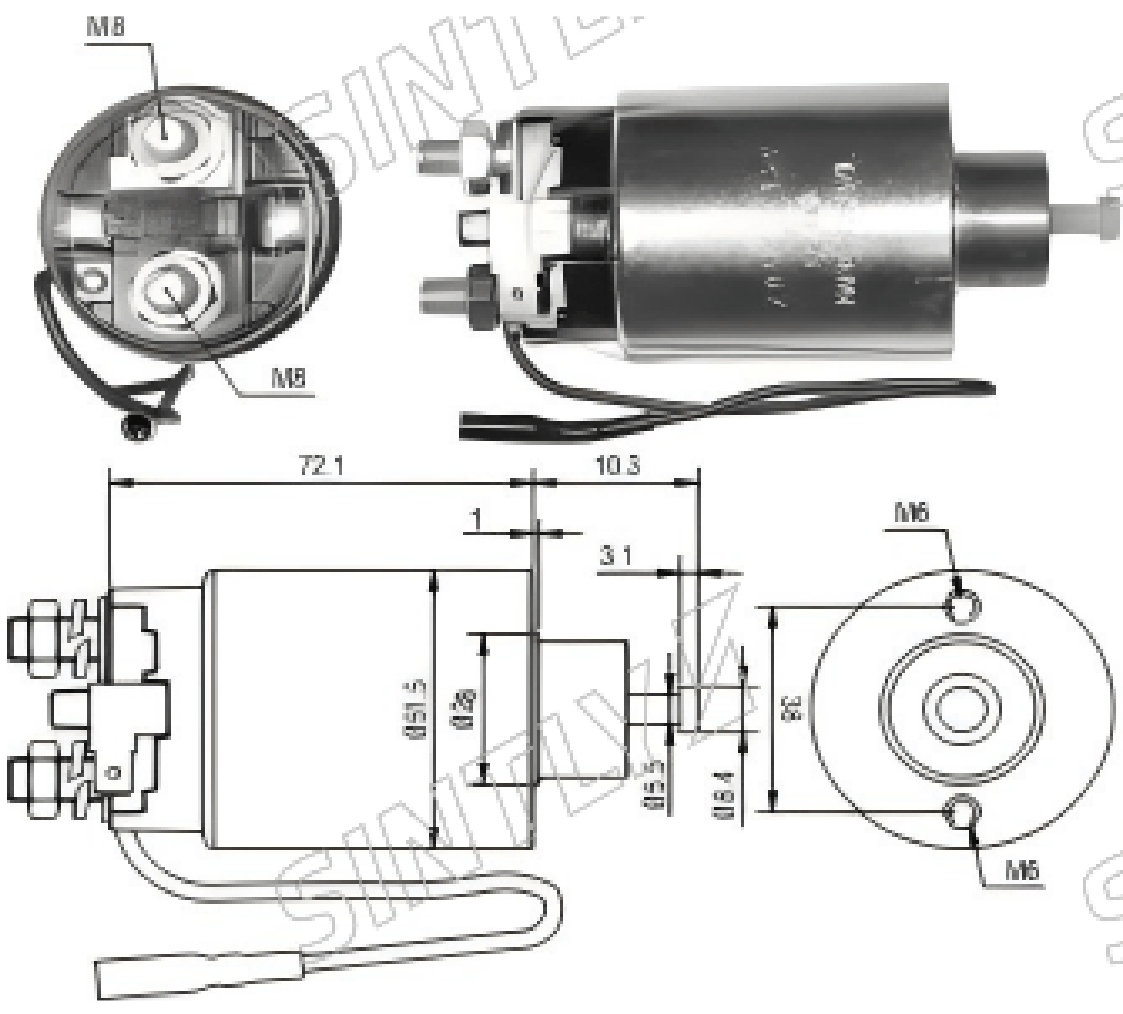


## 产品规格

| 规格 | 参数值 |
|---|---|
| Voltage | 12 V |
| CLAMP: B+ | M8 |
| CLAMP: MOTOR | M8 |
| CLAMP: S | Male Spade |
| CLAMP: R | Cable Extention |
| weight | 0.645 kg |

## 适用车型

| 品牌 | 车辆 | 车型 | 起始年份 | 截止年份 |
|---|---|---|---|---|
| HYUNDAI | Accent | 1.5L | 01/1994 | |
| HYUNDAI | Elantra | 1.5L | 01/1985 | 01/1994 |
| HYUNDAI | Excel | 1.5L | 01/1994 | |
| HYUNDAI | Pony | 1.5L | 01/1985 | |
| HYUNDAI | Pony | mk2 1.3L | 01/1982 | 01/1989 |
| HYUNDAI | Pony | mk3 1.3L | 01/1982 | 01/1989 |
| HYUNDAI | S Coupe | 1.5L | 01/1985 | 01/1991 |
| MITSUBISHI | Colt | 1.3 with 4G13 engine | 01/1988 | |
| MITSUBISHI | Colt | 1.3i with 4G13 engine | 01/1991 | |
| MITSUBISHI | Colt | 1.5 with 4G15 engine | 01/1988 | 01/1992 |
| MITSUBISHI | Colt | 1.6i with 4G61 engine | 01/1988 | 01/1992 |
| MITSUBISHI | Colt | 1.8i with 4G37 engine | 01/1990 | 01/1992 |
| MITSUBISHI | Galant | 1.6 | 01/1985 | 01/1979 |
| MITSUBISHI | Galant | 1.8 with 4G37 engine | 01/1987 | 01/1989 |
| MITSUBISHI | Galant | 1600 | 01/1975 | 01/1979 |
| MITSUBISHI | Galant | 1850 | 01/1975 | 01/1979 |
| MITSUBISHI | Galant | 2.0 4WD with 4G63 engine | 01/1992 | |
| MITSUBISHI | Galant | 2.0 with 4G63 engine | 01/1984 | 01/1979 |
| MITSUBISHI | Galant | 2.0i with 4G63 engine | 01/1987 | 01/1992 |
| MITSUBISHI | Galant | 2000 | 01/1985 | 01/1979 |
| MITSUBISHI | L 200 | | 01/1981 | |
| MITSUBISHI | L 300 | 1.8 with 4G62 engine | 01/1981 | 01/1985 |
| MITSUBISHI | L 300 | 2.0 with 4G63 engine | 01/1981 | 01/1985 |
| MITSUBISHI | L 300 | 2.4 with 4G64 engine | 01/1990 | |
| MITSUBISHI | Lancer | 1.3 with 4G13 engine | 01/1988 | 01/1991 |
| MITSUBISHI | Lancer | 1.6 with 4G61 engine | 01/1988 | 01/1992 |
| MITSUBISHI | Lancer | 1.8 4WD | 01/1986 | |
| MITSUBISHI | Lancer | 1.8i | 01/1990 | |
| MITSUBISHI | Pajero | 2.4 with 4G64 engine | 01/1990 | 01/1994 |
| MITSUBISHI | Pajero | 2.6 with 4G53 engine | 01/1982 | |
| MITSUBISHI | Space | Gear 2.0i with 4G63 engine | 01/1995 | 01/1996 |
| MITSUBISHI | Space | Runner 1.8i with 4G93 engine | 01/1991 | 01/1992 |
| MITSUBISHI | Space | Wagon 1.8 with 4G37 engine | 01/1983 | 01/1991 |
| MITSUBISHI | Space | Wagon 2.0 with 4G63 engine | 01/1985 | 01/1991 |
| MITSUBISHI | Space | Wagon 2.0i wit 4G63 engine | 01/1985 | 01/1991 |
| MITSUBISHI | Tredia | 1.4 | 01/1982 | 01/1985 |
| MITSUBISHI | Tredia | 1.5 | 01/1982 | 01/1985 |
| MITSUBISHI | Tredia | 1.8 with 4G37 engine | 01/1984 | 01/1987 |

## 原厂编码

M371X61371

MD611378

SB613

## 替代编码 (汽车制造商)

M371X61371 (MITSUBISHI)

MD611378 (MITSUBISHI)

SB613 (MITSUBISHI)