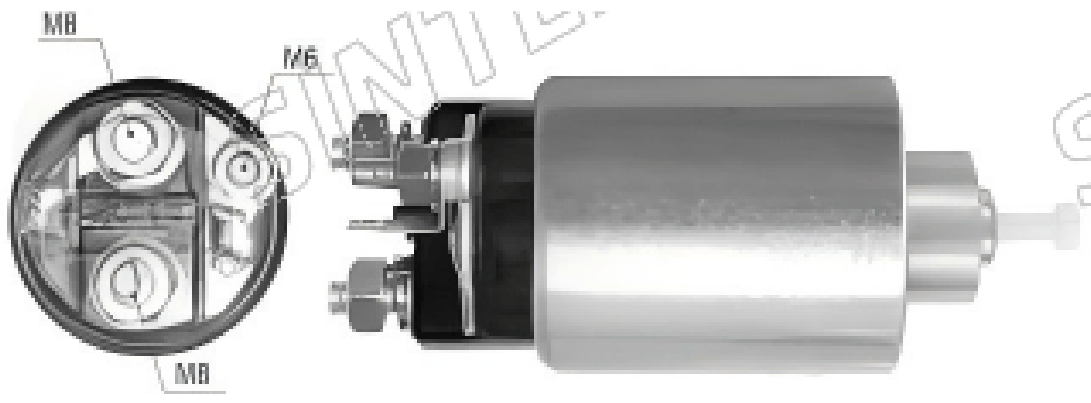

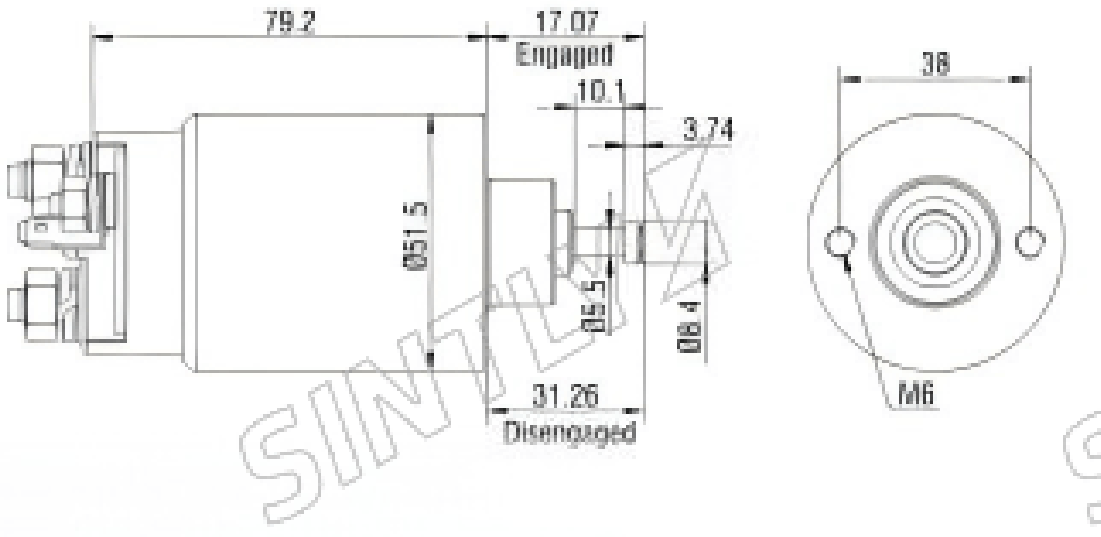

产品规格

规格	参数值
Voltage	12 V
CLAMP: B+	M8
CLAMP: MOTOR	M8
CLAMP: S	M6 Post
weight	0.708 kg

适用车型

品牌	车辆	车型	起始年份	截止年份
FORD	Crown Victoria	4.6 L (281) V8	01/1996	01/1997
FORD	E series	Van 4.6 L (281) V8	01/1997	01/2002
FORD	E series	Van 5.4 L (330) V8	01/1997	01/2002
FORD	Expedition	4.6L V8	01/1997	01/1998
FORD	Expedition	5.4L V8	01/1997	01/1998
FORD	F series	Pick-up 4.6 L (281) V8	01/1997	01/1998
FORD	F series	Pick-up 5.4 L (330) V8	01/1997	01/1998
LINCOLN	Mark	serie 4.6 L (281) V8	01/1997	01/1998
LINCOLN	Navigator	5.4L V8	01/1998	
LINCOLN	Town Car	4.6L (281) V8	01/1996	01/1997
MERCURY	Cougar	4.6 L (281) V8	01/1997	
MERCURY	Marquis	4.6 L (281) V8	01/1996	01/1997

原厂编码

PMGR Starters	66-208

替代编码 (汽车制造商)

PMGR Starters (VISTEON)	66-208 (WAI)