SINTLY

SINTLY | STARTER MOTOR
XTLSTR0023

VOLTAGE **12** V

POWER **1.10** kW

APPLICATIONS AUDI, SEAT, SKODA, VW

DIMENSIONS

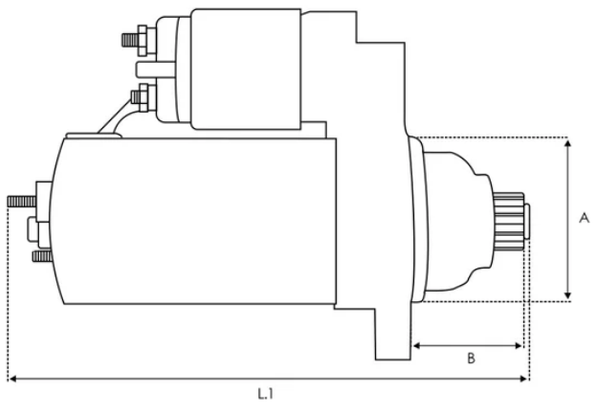

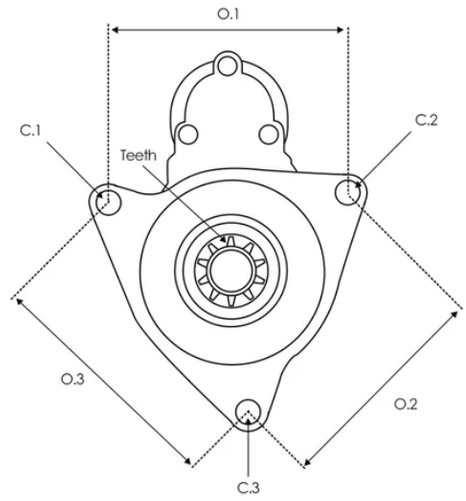

A **79.00 mm** B **43.00 mm** Teeth **11 qty.** L.1 **210.00 mm** O.1 **120.00 mm** C.1 **11.00 mm** C.2 **11.00 mm**

OE 编号

Other	0001121435

替代编码

3EFFE	STRF234

A.Z. MEISTERTEILE	AZMT-53-010-1372

ACAUTO	AC-CBS5904
AINDE	25-4219CT
ALANKO	10438585
AS-PL	S0567 UD12005S UD12910S
ATL AUTOTECHNIK	A25360
AUTO MAGNETO	AM-2345
AUTOTEAM	SBO554A
BOSCH	0001121436 0986025360 1986S00791
CARGO	115900 F032115900
CASCO	CST10554AS CST10554GS
CEVAM	3072
DRI	311274112
EAI	12219
ELECTROLOG	STR1704
ELSTOCK	25-4219
ERA	220886A

EUROTEC	11090195
FARCOM	107441
FRIESEN	8080313
GHIBAUDI	SG1081
HELLA	8EA011612-361
HENKEL PARTS	3114771 3114772
HERTH+BUSS	42025360
ITAB AUTOMOTIVE	10010554AV
KRAUF	STB0461
KUHNER	255095 255095B
LOGISTIK	332190
LUCAS	LRS02547 LRS2547
MAPCO	13251
MEAT & DORIA	5010470
MOTRIO	8550506371
POWERMAX	88214389

QUINTON HAZELL	QRS2468
REAL	20401455BN 20401455OE
ROLLCO	STM1308
SANDO	6010554.0 6010554.1
SIDAT	S12BH0601A2
SNRA	VW9092
STARDAX	STX200364
STARTCAR	219ST21
TESLA	TT16799
TMI	ST01723
VALEO	438432 458932
VEMO	V10-12-21435
VW	02E911023 02E911023S 02E911023SX
WAI	19214N 19214R 200.544.112.010 200.544.112.280 200.544.112.460 S131.355 S144.600
WILMINK GROUP	WG2013457

WILSON	91-15-7321	91-15-7321N
WOODAUTO	STR50746	WOOSTR50746

适用车型

SKODA

OCTAVIA III (5E3, NL3, NR3)

2.0 TSI RS 05/2013-02/2017
2.0 TSI RS 05/2015-10/2020
1.8 TSI 4x4 05/2014-10/2020
2.0 TDI 11/2012-10/2020
2.0 TDI 11/2012-10/2020
2.0 TDI 11/2012-10/2020
2.0 TDI 11/2012-10/2020
2.0 TDI 11/2012-10/2020
2.0 TDI 4x4 05/2013-10/2020
2.0 TDI 4x4 05/2013-10/2020
2.0 TDI 4x4 05/2013-10/2020
2.0 TDI 4x4 05/2013-10/2020

SUPERB III Estate (3V5)

2.0 TSI 4x4 03/2015
2.0 TSI 4x4 03/2015
2.0 TSI 4x4 03/2015
2.0 TSI 03/2015
2.0 TDI 03/2015
2.0 TDI 03/2015
2.0 TDI 4x4 03/2015
2.0 TDI 4x4 03/2015
2.0 TDI 03/2015
2.0 TDI 4x4 03/2015

SUPERB III (3V3)

2.0 TSI 4x4 03/2015
2.0 TSI 03/2015
2.0 TSI 4x4 03/2015
2.0 TSI 4x4 03/2015
2.0 TDI 03/2015
2.0 TDI 4x4 03/2015
2.0 TDI 03/2015
2.0 TDI 4x4 03/2015
2.0 TDI 03/2015

2.0 TDI 4x4 03/2015

OCTAVIA III Combi (5E5, 5E6)

2.0 TSI RS 05/2015-10/2020 2.0 TSI RS 11/2012-02/2017

2.0 TDI 11/2012-10/2020 2.0 TDI 11/2012-10/2020

2.0 TDI 11/2012-10/2020 2.0 TDI 11/2012-10/2020

2.0 TDI 11/2012-10/2020 2.0 TDI 4x4 11/2012-10/2020

2.0 TDI 4x4 11/2012-10/2020 2.0 TDI 4x4 11/2012-10/2020

2.0 TDI 4x4 11/2012-10/2020

KODIAQ I (NS6, NS7, NV7)

2.0 TSI 4x4 02/2019 2.0 TSI 4x4 02/2019 1.5 TSI 07/2018

2.0 TDI 4x4 10/2016 1.5 TSI 4x4 07/2018 2.0 TSI 4x4 10/2016

1.4 TSI 4x4 10/2016 1.4 TSI 10/2016 1.5 TSI 4x4 07/2018

1.5 TSI 07/2018 1.4 TSI 4x4 10/2016 1.4 TSI 10/2016

2.0 TDI 4x4 09/2016 2.0 TDI 4x4 09/2016 2.0 TDI 4x4 09/2016

2.0 TDI 10/2016 2.0 TDI 10/2016 2.0 TDI 10/2016 1.4 TSI 10/2016

1.4 TSI 10/2016

YETI (5L)

1.8 TSI 4x4 11/2009-12/2017 1.8 TSI 4x4 05/2009-12/2017

2.0 TDI 11/2011-12/2017 2.0 TDI 11/2011-12/2017

2.0 TDI 4x4 05/2009-12/2017 2.0 TDI 4x4 05/2009-12/2017

2.0 TDI 4x4 11/2009-05/2015 2.0 TDI 4x4 11/2009-05/2015

2.0 TDI 4x4 05/2009-12/2017 1.4 TSI 4x4 05/2015-12/2017

2.0 TDI 05/2015-12/2017 1.6 04/2014-12/2017

2.0 TDI 4x4 05/2015-12/2017 2.0 TDI 4x4 05/2015-12/2017

2.0 TDI 05/2015-12/2017

SUPERB II Estate (3T5)

2.0 TFSI 05/2010-05/2015 2.0 TDI 16V 4x4 11/2010-05/2015

1.8 TSI 10/2009-05/2015 1.8 TSI 4x4 10/2009-05/2015

2.0 TDI 16V 10/2009-05/2015 2.0 TDI 16V 10/2009-05/2015

2.0 TDI 16V 10/2009-05/2015 2.0 TDI 4x4 10/2009-05/2015

2.0 TDI 10/2009-05/2015 2.0 TDI 10/2009-05/2015

2.0 TDI 4x4 10/2009-05/2015

SUPERB II (3T4)

2.0 TFSI 05/2010-05/2015 1.8 TSI 03/2009-05/2015

2.0 TDI 16V 4x4 11/2010-05/2015 1.8 TSI 4x4 03/2009-05/2015

2.0 TDI 4x4 09/2008-05/2015 2.0 TDI 07/2008-05/2015

2.0 TDI 4x4 09/2008-05/2015 2.0 TDI 07/2008-05/2015

2.0 TDI 16V 01/2009-05/2015 2.0 TDI 16V 01/2009-05/2015

2.0 TDI 16V 01/2009-05/2015

OCTAVIA II Combi (1Z5)

2.0 TFSI 10/2005-02/2013 2.0 TFSI 10/2005-02/2013

OCTAVIA II (1Z3)

2.0 TFSI 10/2005-02/2013 2.0 TFSI 10/2005-02/2013

AUDI

TT (FV3, FVP)

2.0 TFSI 07/2014
2.0 TTS quattro 11/2014
2.0 TFSI quattro 07/2014
2.0 TTS quattro 07/2015
2.0 TTS quattro 07/2015
2.0 TTS quattro 02/2015

A3 Limousine (8VS, 8VM)

S3 quattro 05/2014-10/2020
1.8 TFSI 11/2013-10/2020
S3 quattro 05/2014-10/2020
S3 quattro 05/2014-10/2020
2.0 TFSI 11/2015-10/2020
2.0 TFSI 11/2015-10/2020
S3 quattro 10/2013-05/2014
S3 quattro 05/2014-08/2016
S3 quattro 10/2013-10/2020
S3 quattro 10/2013-10/2020

TT Roadster (FV9, FVR)

2.0 TTS quattro 02/2015
2.0 TFSI quattro 11/2014
2.0 TTS TFSI quattro 11/2014
2.0 TFSI 11/2014

A3 Convertible (8V7, 8VE)

2.0 TFSI quattro 05/2014-10/2020
S3 quattro 04/2014-10/2020
S3 quattro 04/2014-10/2020
1.8 TFSI 05/2014-10/2020

Q3 (8UB, 8UG)

2.0 TFSI quattro 11/2014-10/2018
2.0 TFSI 05/2015-10/2018
2.0 TFSI quattro 11/2014-10/2018
1.4 TFSI 07/2016-10/2018
2.0 TFSI quattro 06/2011-04/2015
1.4 TSI 10/2013-10/2018
1.4 TSI 10/2013-10/2018
1.4 TSI 10/2013-10/2018

2.0 TDI quattro 06/2011-04/2015 2.0 TFSI quattro 06/2011-04/2015

Q3 (F3B)

40 TFSI quattro 07/2018 40 TFSI quattro 07/2018

45 TFSI quattro 07/2018

Q3 Sportback (F3N)

40 TFSI quattro 11/2019 40 TFSI quattro 11/2019

45 TFSI quattro 06/2019

TT Roadster (8J9)

2.0 TFSI quattro 05/2010-06/2014 2.0 TFSI quattro 05/2010-06/2014

2.0 TFSI 05/2010-06/2014

A3 (8V1, 8VK)

S3 quattro 02/2013-07/2014 S3 quattro 11/2012-08/2016

S3 quattro 05/2014-08/2016

A3 Sportback (8VA, 8VF)

S3 quattro 11/2012-10/2020 S3 quattro 11/2012-10/2020

S3 quattro 05/2013-08/2016 S3 quattro 05/2014-08/2016

TT (8J3)

2.0 TFSI quattro 05/2010-06/2014 2.0 TFSI 05/2010-06/2014

2.0 TFSI quattro 05/2010-06/2014

VW

PASSAT B8 Variant (3G5, CB5)

2.0 TSI 4motion 05/2015
2.0 TSI 4motion 05/2015
2.0 TSI 08/2014
2.0 TSI 08/2014
2.0 TSI 4motion 09/2018

PASSAT ALLTRACK B8 Variant (3G5, CB5)

2.0 TSI 4motion 07/2015
2.0 TSI 4motion 08/2018
2.0 TSI 4motion 11/2018
2.0 TSI 4motion 11/2018

GOLF VII Variant (BA5, BV5)

2.0 R 4motion 03/2015-08/2020
2.0 R 4motion 03/2015-08/2020
2.0 R 4motion 03/2015-03/2017

GOLF VII (5G1, BQ1, BE1, BE2)

2.0 R 4motion 11/2013-08/2020
2.0 R 4motion 11/2013-08/2020
2.0 R 4motion 11/2013-03/2017
2.0 GTI 04/2013-08/2020
2.0 GTI 04/2013-08/2020
2.0 GTI 04/2013-08/2020
2.0 GTI 11/2013-07/2017
2.0 GTI 04/2013-08/2020
2.0 GTI 04/2013-08/2020
2.0 GTI 11/2013-07/2017
2.0 GTI 04/2013-08/2020
2.0 GTI Clubsport 02/2016-03/2017

PASSAT B8 (3G2, CB2)

2.0 TSI 4motion 05/2015
2.0 TSI 4motion 05/2015
2.0 TSI 02/2015
2.0 TSI 02/2015
2.0 TSI 4motion 09/2018

GOLF ALLTRACK VII Variant (BA5, BV5)

1.8 TSI 4motion 12/2014-08/2020

TIGUAN ALLSPACE (BW2, BJ2)

2.0 TSI 4motion 07/2017 2.0 TSI 4motion 07/2017

2.0 TSI 4motion 03/2017 2.0 TSI 4motion 09/2020

2.0 TSI 4motion 09/2018 2.0 TSI 4motion 09/2018 1.4 TSI 06/2017

1.4 TSI 06/2017

ARTEON (3H7, 3H8)

2.0 TSI 05/2017 2.0 TSI 05/2017 2.0 TSI 05/2017

TIGUAN (AD1, AX1)

2.0 TSI 4motion 09/2018-07/2020 2.0 TSI 4motion 09/2018

2.0 TSI 4motion 09/2018 2.0 TSI 4motion 06/2016

2.0 TSI 4motion 01/2016 1.4 TSI 05/2016 1.4 TSI 01/2016-03/2022

1.4 TSI 05/2016 1.4 TSI 01/2016-03/2022 1.4 TSI 05/2016

1.4 TSI 4motion 05/2016-07/2018 1.4 TSI 4motion 05/2016-07/2018

GOLF VII Van (5G1)

2.0 GTi 04/2015-03/2017 2.0 GTi 04/2013-03/2017

PASSAT B7 (362)

2.0 TSI 11/2010-12/2014

SHARAN (7N1, 7N2)

2.0 TFSI 12/2010-11/2015

PASSAT ALLTRACK B7 (365)

2.0 TSI 4motion 01/2012-12/2014

TRANSPORTER T6 / CARAVELLE T6 Bus (SGB, SGJ, SHB, SHJ)

2.0 TSI 4motion 06/2015-07/2019 2.0 TSI 04/2015-07/2019

MULTIVAN T6 (SGF, SGM, SGN, SHM, SHN)

2.0 TSI 04/2015-07/2019 2.0 TSI 4motion 06/2015-07/2019

TRANSPORTER T6 Van (SGA, SGH, SHA, SHH)

2.0 TSI 04/2015-07/2019 2.0 TSI 4motion 06/2015-07/2019

PASSAT B7 Estate Van (365)

2.0 TSI 11/2010-12/2014

CALIFORNIA T6 Camper (SGC, SGG, SHC)

2.0 TSI 04/2015-07/2019 2.0 TSI 4motion 06/2015-07/2019

SHARAN VAN (7N1, 7N2)

2.0 TSI 12/2010-11/2015

PASSAT B7 Variant (365)

2.0 TSI 11/2010-12/2015

BEETLE (5C1, 5C2)

2.0 TFSI 04/2011-07/2016 2.0 TFSI 04/2011-07/2016

2.0 TFSI 04/2011-07/2016 2.0 TSI 12/2012-07/2019

2.0 TSI 12/2012-07/2019 1.2 TSI 07/2011-07/2019

GOLF VI Convertible (517)

2.0 GTI 05/2012-05/2016 2.0 TSI 11/2013-05/2016 2.0 R 01/2013-05/2016

GOLF VI (5K1)

2.0 GTi 06/2009-11/2013 2.0 GTi 06/2009-11/2013

2.0 GTi 05/2011-11/2012 2.0 GTi 04/2009-11/2012

2.0 R 4motion 11/2009-11/2012

TIGUAN (5N_)

2.0 TSI 4motion 05/2011-07/2018 2.0 TSI 4motion 05/2011-07/2018

1.4 TSI 4motion 05/2011-07/2018 1.4 TSI 4motion 05/2011-07/2018

1.4 TSI 05/2011-07/2018 1.4 TSI 05/2011-07/2018

1.4 TSI 4motion 09/2007-07/2018 1.4 TSI 05/2008-07/2018

1.4 TSI 4motion 09/2007-07/2018 1.4 TSI 4motion 09/2007-07/2018

1.4 TSI 05/2008-07/2018 1.4 TSI 05/2008-07/2018 1.4 TSI 05/2015-07/2018

1.4 TSI 05/2015-07/2018 2.0 TFSI 4motion 09/2007-07/2018

2.0 TFSI 4motion 09/2007-07/2018 2.0 TFSI 4motion 09/2007-07/2018

2.0 TFSI 4motion 09/2007-07/2018 2.0 TFSI 4motion 09/2007-07/2018

2.0 TFSI 4motion 09/2007-07/2018

CC B7 (358)

2.0 TSI 11/2011-12/2016 2.0 TDI 05/2015-12/2016

2.0 TDI 12/2012-12/2016

BEETLE Convertible (5C7, 5C8)

2.0 TFSI 12/2011-07/2016 2.0 TFSI 12/2011-07/2016

2.0 TFSI 12/2011-07/2016 2.0 TSI 12/2012-07/2019

2.0 TSI 12/2012-07/2019

JETTA IV (162, 163, AV3, AV2)

2.0 TSI 12/2012-12/2017 2.0 TSI 12/2012-12/2017

2.0 TFSI 12/2010-07/2014 2.0 TFSI 12/2010-07/2014

2.0 TFSI 12/2010-07/2014

CADDY IV MPV (SAB, SAJ)

1.4 TGI CNG 06/2015-09/2020

TIGUAN VAN (5N_)

2.0 TSI 4motion (5N2) 05/2011-07/2018

2.0 TSI 4motion (5N1) 11/2009-05/2011

2.0 TSI 4motion (5N1) 11/2009-05/2011

PASSAT CC B6 (357)

2.0 TSI 11/2010-01/2012 2.0 TFSI 06/2008-01/2012

2.0 TFSI 06/2008-01/2012 2.0 TFSI 06/2008-01/2012

2.0 TFSI 06/2008-01/2012

TRANSPORTER T5 Van (7HA, 7HH, 7EA, 7EH)

2.0 TSI 4motion 07/2011-08/2015 2.0 TSI 05/2011-08/2015

MULTIVAN T5 (7HM, 7HN, 7HF, 7EF, 7EM, 7EN)

2.0 TSI 05/2011-08/2015 2.0 TSI 4motion 07/2011-08/2015

2.0 TSI 07/2012-08/2015

TRANSPORTER T5 Bus (7HB, 7HJ, 7EB, 7EJ)

2.0 TSI 4motion 07/2011-08/2015 2.0 TSI 05/2011-08/2015

2.0 TSI 07/2012-08/2015 2.0 TDI 05/2010-08/2015

2.0 TDI 4motion 05/2010-08/2015 2.0 TDI 4motion 05/2010-08/2015

2.0 TDI 05/2010-08/2015 2.0 TDI 4motion 09/2009-08/2015

2.0 TDI 09/2009-08/2015 2.0 TDI 4motion 09/2009-08/2015

2.0 TDI 09/2009-08/2015

SCIROCCO III (137, 138)

2.0 TSI 11/2009-11/2017

EOS (1F7, 1F8)

2.0 TSI 11/2009-08/2015 2.0 TFSI 03/2006-08/2015

2.0 TFSI 03/2006-08/2015 2.0 TFSI 03/2006-08/2015

2.0 TFSI 03/2006-08/2015 2.0 TFSI 03/2006-08/2015

2.0 TFSI 03/2006-08/2015

GOLF VI Van (5K1)

2.0 GTi 02/2009-11/2012

SCIROCCO Van (137)

2.0 TFSi 11/2009-05/2014

CALIFORNIA T5 Camper (7EC, 7EF, 7EG, 7HF, 7HC)

2.0 TSI 05/2011-08/2015 2.0 TSI 07/2012-08/2015

2.0 TSI 4motion 07/2011-08/2015

PASSAT B6 Variant (3C5)

2.0 TFSI 08/2005-11/2010 2.0 TFSI 08/2005-11/2010

2.0 TFSI 08/2005-11/2010 2.0 TFSI 08/2005-11/2010

2.0 TFSI 08/2005-11/2010 2.0 TFSI 08/2005-11/2010

2.0 TFSI 08/2005-11/2010

PASSAT B6 (3C2)

2.0 TFSI 07/2005-07/2010 2.0 TFSI 07/2005-07/2010

2.0 TFSI 07/2005-07/2010 2.0 TFSI 07/2005-07/2010

2.0 TFSI 07/2005-07/2010 2.0 TFSI 07/2005-07/2010

2.0 TFSI 07/2005-07/2010

SEAT

LEON (5F1)

2.0 Cupra 01/2017-08/2018
2.0 Cupra 10/2013-08/2020
2.0 Cupra 10/2013-08/2020
2.0 Cupra 10/2015-08/2020
2.0 Cupra 10/2015-08/2020

LEON ST (5F8)

2.0 Cupra 11/2016-08/2018
2.0 Cupra 10/2013-08/2020
2.0 Cupra 10/2013-08/2020
2.0 Cupra 4Drive 11/2016-08/2020
2.0 Cupra 4Drive 11/2016-08/2020
2.0 Cupra 10/2015-08/2020
2.0 Cupra 10/2015-08/2020

LEON SC (5F5)

2.0 Cupra 01/2017-08/2018
2.0 Cupra 10/2013-11/2016
2.0 Cupra 10/2013-11/2016
2.0 Cupra 10/2015-11/2016

ALHAMBRA (710, 711)

2.0 TSI 11/2010-05/2012
1.8 TSI 11/2012-04/2015

ALTEA XL (5P5, 5P8)

2.0 TFSI 4x4 05/2009-07/2015
2.0 TFSI 05/2009-07/2015

LEON ST Estate Van (5F8)

2.0 Cupra 10/2013-08/2020

LEON Hatchback Van (5F1)

2.0 Cupra 09/2015-10/2016
2.0 TDI 10/2012-08/2018
1.8 TFSI 02/2013-08/2018
2.0 TDI 10/2012-08/2018

LEON (1P1)

2.0 TFSI 11/2006-05/2011
2.0 TFSI 11/2006-05/2011
2.0 TFSI 06/2009-12/2012