SINTLY

SINTLY | STARTER MOTOR

XTLSTR0054

VOLTAGE **12** V

POWER **1.20** kW

APPLICATIONS DAEWOO, MERCEDES-BENZ, SSANGYONG, VW

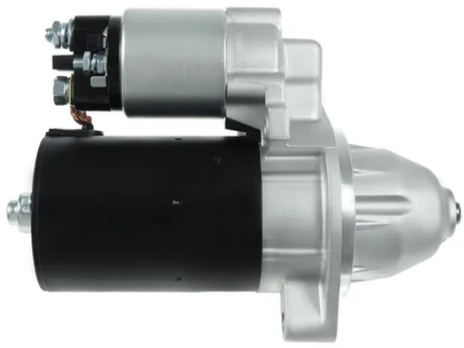

DIMENSIONS

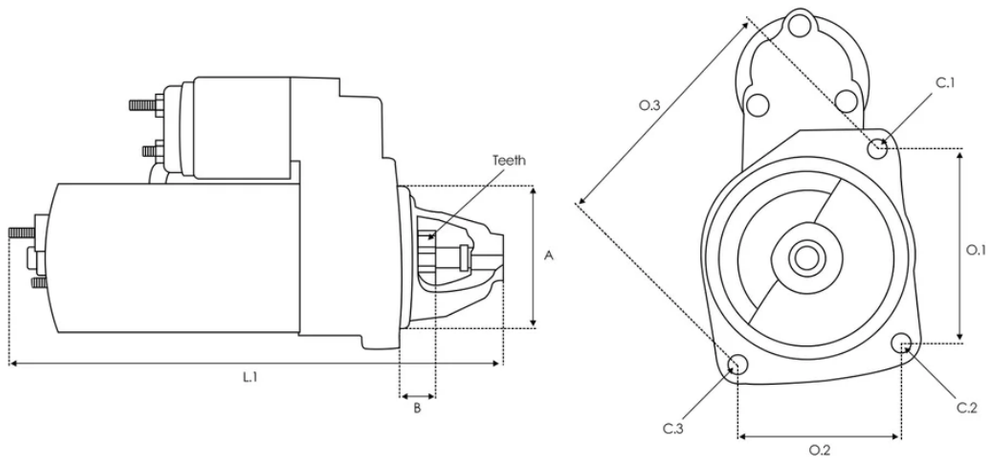

A **82.50 mm** B **27.00 mm** Teeth **9 qty.** L.1 **216.00 mm** O.1 **105.00 mm** C.1 **M10x1.5 mm** C.2 **M10x1.5 mm**

OE 编号

Other	0001107048

替代编码

3EFFE	PRSL005 STRL005
ACAUTO	AC-CBS1075

AINDE	AI-80009
ALANKO	10439697 11439697
ANDEL	ANM18600 ANM18600X
APEC	ASM1272
AS-PL	S0087
AUTO MAGNETO	AM-2996
AUTOELECTRO	AES1185
AUTOTEAM	SBO141 SBO141A
BORG & BECK	BST2158
BOSCH	0001107037 0001107072 0001107096 0001107403 0001107403-R 0001107416 0001108124 0001108149 0001314036 0986013010 0986016380 0986018850 1005821738 1986S00669
BOVEZ	STA0163R
BTS TURBO	S104856
CARGO	111347 F032111347
CARWOOD GROUP	BREF0320986018850 BREF032111347 BREF0321986S00669

CASCO	CST10141AS CST10141GS
CEVAM	3202
CQ	22.0327 22.1075 22.1075M
DAF	1516657R
DELCO	DRS8850
DRI	325023092
DT SPARE PARTS	4.67723
EAI	11276 11809
ELECTROLOG	STR1140 STR1452
ELSTOCK	25-2098 25-3102
ERA	220060 220062
EUROTEC	11018850
FRIESEN	8016380
HC PARTS	CS1075
HELLA	8EA012527-271 8EA737488-001
HERTH+BUSS	42016380

HOFFER	H5010990 H5015281
ISKRA / LETRIKA	IS9307
ITAB AUTOMOTIVE	10010141AV 10010141OV
KRAUF	STB1075
KUHNER	101075 101075B 101075S 101075V 10327 10327B
LE PART	LES0338
LOGISTIK	330479 331227
LUCAS	LRS00185 LRS185
MAGNETI MARELLI	063521074030 063721075010 63111023 63111043 943251694 943289100 MSN2074
MAHLE	MS 421
MEAT & DORIA	5010990 5015281
MERCEDES	0011516901 0031512801 004151060180 0041516901 004151690180 0051510601 005151060180 0051513401 005151340180 0051513601 0051514601 0051515301 0051517301 1510100469 1611513001 1611513301 A0011516901 A001611513001 A001611513301 A0031512801 A004151060180 A0041516901 A004151690180 A0051510601

	A005151060180 A0051513401 A005151340180 A0051513601 A0051514601 A0051515301 A0051517301 A1510100469 A1611513301
MTR	13047883
NAPA	NPANSM1272
POWERMAX	8212882
PRESTOLITE	20500185 S1007B S1017B
REAL	20401141BN 20401141OE
RIDEX	2S0032 2S0032R
RNL	RNL1638 RNL1885
SANDO	6010141.0 6010141.1 6010141BN 6010141OE
SIDAT	S12BH0272A2 S12VA0118A2
SIOM	MAV171070 MAV3080 MAV3080A
SNRA	ME9002
SOVEREIGN	SS394 SS398
STARDAX	STX200132 STX200132R STX200202 STX200202R

STARTCAR	809ST11
TESLA TECHNICS	TT15226 TT15226PRO
TMI	ST00772
VALEO	436603 455947 D6RA168
VEMO	V30-12-16380
VW	069911023G 069911023GX 100911023G 100911023GX 69911023G 69911023GX
WAI	17730N 550.507.092.000 550.507.092.010 550.507.092.018 550.507.092.210 550.507.092.211 550.507.092.215 550.507.092.280 550.507.092.500 550.507.092.505 S133.139 S145.001
WILMINK GROUP	WG2196698 WG2315446
WILSON	91-15-7135 91-15-7135N
WOODAUTO	STR54010

适用车型

MERCEDES-BENZ

VITO Bus (W638)

113 2.0 (638.114, 638.194) 02/1996-07/2003

113 2.0 (638.114, 638.194) 02/1996-07/2003

114 2.3 (638.134, 638.194) 12/1996-07/2003

114 2.3 (638.134, 638.194) 12/1996-07/2003

112 CDI 2.2 (638.194) 03/1999-07/2003

108 CDI 2.2 (638.194) 03/1999-07/2003

110 CDI 2.2 (638.194) 03/1999-07/2003

V-CLASS (638/2)

V 200 (638.214, 638.294) 02/1997-07/2003

V 230 (638.234, 638.294) 10/1996-07/2003

V 230 (638.234, 638.294) 10/1996-07/2003

V 200 (638.214, 638.294) 02/1997-07/2003

V 200 CDI (638.294) 03/1999-07/2003

V 220 CDI (638.294) 03/1999-07/2003

CLK Convertible (A208)

CLK 200 Kompressor (208.445) 03/1998-06/2000

CLK 230 Kompressor (208.447) 03/1998-06/2000

CLK 230 Kompressor (208.447) 03/1998-06/2000

CLK 230 Kompressor (208.448) 06/2000-03/2002

CLK 200 Kompressor (208.444) 06/2000-03/2002

CLK 200 (208.435) 03/1998-03/2002

CLK 200 (208.435) 03/1998-03/2002

CLK (C208)

CLK 200 Kompressor (208.345) 06/1997-06/2000

CLK 200 Kompressor (208.344) 06/2000-06/2002

CLK 230 Kompressor (208.348) 06/2000-06/2002

CLK 230 Kompressor (208.347) 06/1997-06/2000

CLK 230 Kompressor (208.347) 06/1997-06/2000

CLK 200 (208.335) 06/1997-06/2002

E-CLASS (W210)

E 200 Kompressor (210.045) 06/1997-03/2002

E 200 Kompressor (210.048) 08/2000-03/2002

E 230 (210.037) 06/1995-06/1997

E 200 (210.035) 06/1995-08/2000

VITO Van (W638)

113 2.0 (638.014, 638.094) 03/1997-07/2003

113 2.0 (638.014, 638.094) 03/1997-07/2003

114 2.3 (638.034, 638.094) 03/1997-07/2003

114 2.3 (638.034, 638.094) 03/1997-07/2003

112 CDI 2.2 (638.094) 03/1999-07/2003

110 CDI 2.2 (638.094) 03/1999-07/2003

108 CDI 2.2 (638.094) 03/1999-07/2003

E-CLASS T-Model (S210)

E 200 T Kompressor (210.245) 06/1997-03/2003

E 200 T Kompressor (210.248) 08/2000-03/2003

E 200 T (210.235) 06/1996-08/2000

E 230 T (210.237) 06/1996-06/1997

SLK (R170)

200 Kompressor (170.445) 10/1996-03/2000

230 Kompressor (170.447) 09/1996-03/2000

230 Kompressor (170.449) 03/2000-04/2004

200 Kompressor (170.444) 03/2000-04/2004

200 (170.435) 09/1996-03/2000

C-CLASS Coupe (CL203)

C 180 (203.735) 03/2001-05/2002

C 200 Kompressor (203.745) 03/2001-05/2002

C 230 Kompressor (203.747) 03/2001-05/2002

C 220 CDI (203.706) 03/2001-01/2004

C-CLASS T-Model (S202)

C 180 T (202.081) 09/2000-03/2001

C 200 T Kompressor (202.087) 09/2000-03/2001

C 180 T (202.078) 06/1996-09/2000

C 200 T (202.080) 06/1996-03/2001

C 180 T (202.078) 06/1996-09/2000

C 200 T (202.080) 06/1996-03/2001

C 200 T Kompressor (202.082) 11/1996-03/2001

C 230 T Kompressor (202.085) 06/1997-09/2000

C 230 T (202.083) 06/1996-06/1998

C-CLASS (W203)

C 180 (203.035) 10/2000-05/2002

C 200 Kompressor (203.045) 05/2000-06/2002

C 180 Kompressor (203.046) 05/2002-02/2007

C 220 CDI (203.006, 203.008) 05/2000-02/2007

C 220 CDI (203.006, 203.008) 05/2000-02/2007

C-CLASS T-Model (S203)

C 180 (203.235) 03/2001-05/2002

C 200 Kompressor (203.245) 03/2001-05/2002

SLK (R171)

200 Kompressor (171.445) 01/2008-02/2011

VITO / MIXTO Van (W639)

126 (639.601, 639.603, 639.605) 09/2007

SPRINTER 4-t Platform/Chassis (B904)

414 NGT 02/1995-05/2006

414 NGT 02/1995-05/2006

414 (904.012, 904.013, 904.612, 904.613) 02/1995-05/2006

414 4x4 (904.012, 904.013, 904.612, 904.613) 05/1997-05/2006

414 4x4 (904.012, 904.013, 904.612, 904.613) 05/1997-05/2006

414 (904.012, 904.013, 904.612, 904.613) 02/1995-05/2006

C-CLASS (W202)

C 180 (202.018) 11/1994-05/2000

C 230 Kompressor (202.024) 10/1995-05/2000

C 200 Kompressor (202.025) 10/1995-05/2000

C 180 (202.018) 11/1994-05/2000

C 230 (202.023) 06/1996-06/1997

C 200 Kompressor (202.025) 11/1996-05/2000

C 180 (202.018) 03/1993-05/2000

C 220 (202.022) 03/1993-05/2000

C 200 (202.020) 01/1994-05/2000

C 180 (202.018) 03/1993-05/2000

C 200 (202.020) 01/1994-05/2000

190 (W201)

E 2.5-16 Evolution II 05/1990-08/1993
E 2.3-16 09/1985-12/1987
E 2.0 01/1985-08/1993
2.0 (201.023) 01/1986-05/1990
E 2.3-16 (201.034) 04/1984-01/1987
E 2.3-16 09/1985-08/1988
E 2.3 (201.028) 10/1986-08/1993
E 2.5-16 (201.035) 09/1988-08/1993
E 2.5-16 Evolution (201.036) 03/1989-08/1993
E 2.3 09/1986-08/1991
2.0 (201.023) 08/1983-05/1990
E 2.5-16 Evolution (201.036) 03/1989-08/1993
E 2.0 (201.024) 02/1985-12/1986
2.3 09/1987-09/1988
E 2.5-16 (201.035) 03/1989-08/1993
E 1.8 (201.018) 04/1990-08/1993
E 2.0 (201.024) 10/1982-06/1993
E 2.0 (201.024) 02/1985-12/1986
E 2.0 (201.024) 10/1982-06/1993
2.0 (201.022) 10/1982-10/1984
E 2.6 09/1986-12/1989
E 2.6 (201.029) 09/1986-08/1993

E-CLASS Convertible (A124)

E 200 (124.060) 06/1993-03/1998
E 220 (124.062) 06/1993-03/1998

124 Saloon (W124)

200 (124.020) 01/1986-05/1990
200 01/1986-10/1992
200 (124.020) 12/1985-05/1990
200 E (124.019) 10/1992-06/1993
200 E (124.021) 09/1988-12/1989
230 E (124.023) 01/1985-06/1993
220 E (124.022) 10/1992-06/1993
200 E (124.021) 09/1988-08/1993
230 E (124.023) 12/1984-03/1992
230 E Cat (124.023) 06/1989-06/1993

124 T-Model (S124)

200 T (124.080) 01/1986-05/1990
200 T (124.080) 09/1985-08/1989
200 TE (124.079) 05/1986-06/1993
230 TE (124.083) 09/1985-08/1992

230 TE Cat (124.083) 06/1989-08/1992

200 TE (124.081) 09/1988-08/1992

200 TE 09/1988-12/1989

220 TE (124.082) 10/1992-05/1993

E-CLASS T-Model (S124)

E 220 T (124.082) 06/1993-06/1996

E 200 T (124.079) 06/1993-06/1996

E-CLASS Coupe (C124)

E 200 (124.040) 06/1993-06/1997

E 220 (124.042) 06/1993-06/1997

SPRINTER 2-t Bus (B901, B902)

214 (902.071, 902.072, 902.671, 902.672) 02/1995-05/2006

214 (902.071, 902.072, 902.671, 902.672) 02/1995-05/2006

214 NGT (902.072, 902.671, 902.672) 02/1995-05/2006

214 NGT (902.072, 902.671, 902.672) 02/1995-05/2006

E-CLASS (W124)

E 200 (124.019) 06/1993-06/1995

E 220 (124.022) 06/1993-06/1995

E 500 (124.036) 06/1993-06/1995

M-CLASS (W163)

ML 230 (163.136) 02/1998-06/2005

SPRINTER 4-t Bus (B904)

414 (904.662, 904.663) 02/1996-05/2006

414 (904.662, 904.663) 02/1996-05/2006

SPRINTER 4-t Van (B904)

414 (904.062, 904.063, 904.662, 904.663) 02/1996-05/2006

414 4x4 (904.062, 904.063, 904.662, 904.663) 05/1997-05/2006

414 (904.062, 904.063, 904.662, 904.663) 02/1996-05/2006

414 4x4 (904.062, 904.063, 904.662, 904.663) 05/1997-05/2006

414 NGT 02/1995-05/2006 414 NGT 02/1995-05/2006

SPRINTER 3-t Platform/Chassis (B903)

314 NGT (903.611, 903.612, 903.613, 903.622, 903.012,... 02/1995-05/2006

314 NGT (903.611, 903.612, 903.613, 903.622, 903.012,... 02/1995-05/2006

314 4x4 (903.612, 903.613, 903.622) 02/1995-05/2006

314 4x4 (903.612, 903.613, 903.622) 02/1995-05/2006

314 (903.011, 903.012, 903.013, 903.022, 903.612,... 02/1995-05/2006

314 (903.011, 903.012, 903.013, 903.022, 903.612,... 02/1995-05/2006

SPRINTER 3-t Van (B903)

314 NGT (903.661, 903.061, 903.062, 903.063, 903.662) 02/1995-05/2006

314 NGT (903.661, 903.061, 903.062, 903.063, 903.662) 02/1995-05/2006

314 4x4 (903.661, 903.662, 903.663) 02/1995-05/2006

314 4x4 (903.661, 903.662, 903.663) 02/1995-05/2006

314 (903.061, 903.062, 903.063, 903.661, 903.662) 02/1995-05/2006

314 (903.061, 903.062, 903.063, 903.661, 903.662) 02/1995-05/2006

SPRINTER 3-t Bus (B903)

314 NGT (903.072, 903.671, 903.672) 02/1995-05/2006

314 NGT (903.072, 903.671, 903.672) 02/1995-05/2006

314 4x4 (903.672, 903.673) 02/1995-05/2006

314 4x4 (903.672, 903.673) 02/1995-05/2006

314 (903.071, 903.072, 903.073, 903.671, 903.672,... 02/1995-05/2006

314 (903.071, 903.072, 903.073, 903.671, 903.672,... 02/1995-05/2006

SPRINTER 2-t Platform/Chassis (B901, B902)

214 NGT (902.012, 902.611, 902.612) 02/1995-05/2006

214 NGT (902.012, 902.611, 902.612) 02/1995-05/2006

214 (902.011, 902.012, 902.611, 902.612) 02/1995-05/2006

214 (902.011, 902.012, 902.611, 902.612) 02/1995-05/2006

124 Coupe (C124)

220 CE (124.042) 10/1992-05/1993

200 CE (124.040) 07/1992-07/1993

230 CE Cat (124.043) 06/1989-12/1992

230 CE (124.043) 03/1987-12/1992

200 CE (124.041) 03/1990-12/1992

SPRINTER 2-t Van (B901, B902)

214 NGT (901.661, 902.061, 902.062, 902.661, 902.662) 02/1995-05/2006

214 NGT (901.661, 902.061, 902.062, 902.661, 902.662) 02/1995-05/2006

214 (901.061, 901.062, 901.661, 901.662, 902.061,... 02/1995-05/2006

214 (901.061, 901.062, 901.661, 901.662, 902.061,... 02/1995-05/2006

V-CLASS Van (638/2)

V 230 (638.234, 638.294) 08/1996-07/2003

V 230 (638.234, 638.294) 08/1996-07/2003

T1 Bus (B601)

210 2.3 05/1989-02/1996

208 2.3 05/1977-12/1982

210 2.3 07/1982-01/1990

208 2.3 05/1977-12/1982

T1 Van (601, 611)

210 2.3 05/1989-02/1996

210 2.3 07/1982-02/1996

210 2.3 07/1982-02/1996

T1 Platform/Chassis (B602)

310 2.3 01/1982-12/1994

T1 Platform/Chassis (601)

210 2.3 04/1977-10/1989

210 2.3 04/1977-10/1989

T2/LN1 Platform/Chassis

510 (667.001, 667.002) 04/1986-12/1994

T1/TN Van

410 (611.067, 611.068) 08/1982-06/1995

410 (611.067, 611.068) 08/1982-06/1995

T1/TN Platform/Chassis

410 (611.017, 611.018) 08/1982-06/1995

410 (611.017, 611.018) 08/1982-06/1995

T2/LN1 Van

510 (667.061, 667.062) 04/1986-12/1994

T1 Van (B602)

310 2.3 01/1989-12/1995

310 2.3 06/1989-02/1996

123 Saloon (W123)

200 (123.220) 06/1980-11/1985

230 E (123.223) 04/1980-12/1985

123 T-Model (S123)

230 TE (123.283) 04/1980-11/1985

200 T 11/1980-11/1985

123 Coupe (C123)

230 CE (123.243) 04/1980-12/1985

CLC-CLASS (CL203)

CLC 180 Kompressor (203.746) 05/2008-06/2011

VIANO (W639)

3.5 (639.811, 639.813, 639.815) 09/2007

SSANGYONG

KORANDO Cabrio (KJ)

2.3 01/2002-06/2006 2.3 11/1997-02/2000 2.3 02/1999-11/2006

MUSSO (FJ)

2.3 10/1996-11/2002 2.0 10/1996-05/2005 2.3 04/2003-08/2006

3.2 06/1996-09/2004

KORANDO (KJ)

2.3 05/1997-02/2000 2.0 05/1997-10/2002 2.3 01/1999-11/2006

REXTON / REXTON II (GAB_)

2.3 RX230 4x4 05/2002-08/2006 2.7 Xdi 08/2004 2.7 D 4x4 06/2006

KORANDO (CK)

2.0 4WD 02/2012 2.0 02/2012

VW

LT 28-46 II Van (2DA, 2DD, 2DH)

2.3 05/1996-07/2006

LT 28-35 II Bus (2DB, 2DE, 2DK)

2.3 05/1996-07/2006

LT 28-46 II Platform/Chassis (2DC, 2DF, 2DG, 2DL, 2DM)

2.3 06/1996-07/2006

TARO

2.4 D 4x4 04/1989-03/1997

DAEWOO

KORANDO Cabrio (KJ)

2.0 16V 02/1999 2.3 02/1999

MUSSO (FJ)

2.3 01/1999 3.2 4x4 01/1999

KORANDO (KJ)

2.3 01/1999