SINTLY

SINTLY | STARTER MOTOR

XTLSTR0147

VOLTAGE 12 V

POWER 1.80 kW

APPLICATIONS AUDI, FORD, HYUNDAI, MERCEDES-BENZ, SEAT, SKODA, VW

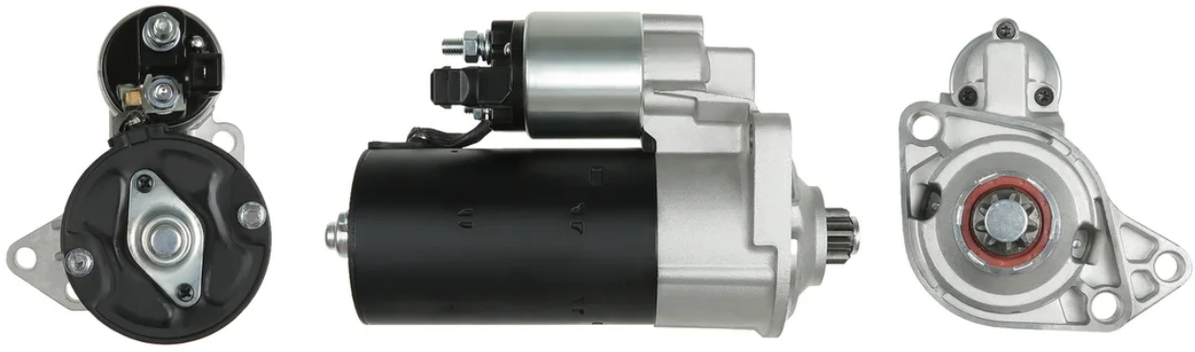

DIMENSIONS

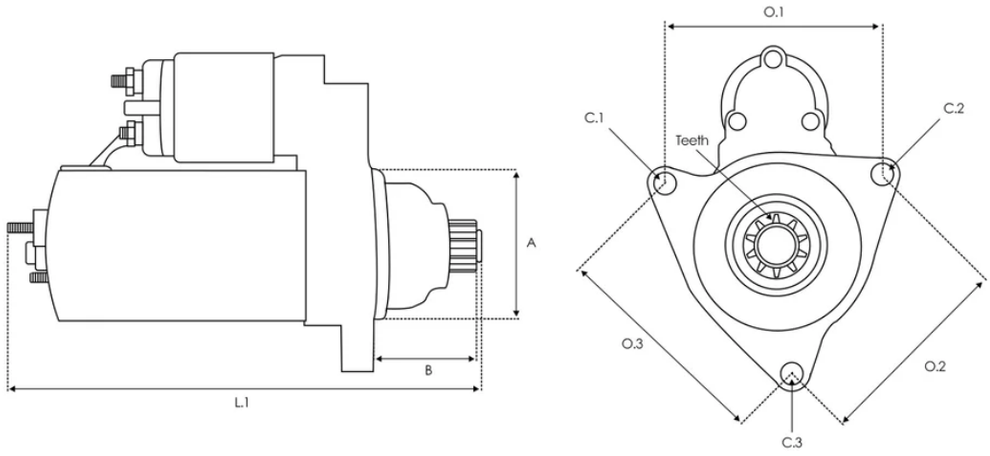

A 76.00 mm B 32.50 mm Teeth 9 qty. L.1 236.00 mm O.1 123.50 mm O.2 32.50 mm O.3 111.50 mm C.1 12.50 mm C.2 12.50 mm C.3 12.50 mm

OE 编号

Other	0001125005

替代编码

3EFFE	STRE219 STRS055 STRS116 STRS741
ACAUTO	AC-CBS0789

ALANKO	10440822
ANDEL	ANM19220
APEC	ASM1282
AS-PL	S0006
ATL AUTOTECHNIK	A17000
AUTOELECTRO	AES9166
AUTOTEAM	SVA209
BORG & BECK	BST2298
BOSCH	0001110076 0001110077 0001110098 0001110099 0001124003 0001124004 0001125006 0001125035 0001125036 0986017000
BOVEZ	STA0033R
BTS TURBO	S100402 S102938 S105645
CARGO	112286 F032112286
CASCO	CST10115AS CST10115GS CST15209GS
CEVAM	3835

DAF	1516828R
DIXIE	S-6198
EAI	11697
ELECTROLOG	STR1186 STR1308 STR79123
ELSTOCK	25-1339 25-2231
ERA	220131 220388
FORD	1032666 1M21AA 95VW-11000-EB 95VW-11000-EC 95VW-11000-GA 95VWGC 97VW-11000-BA 97VWBA
GHIBAUDI	SG0018
HC PARTS	CS1287 CS713 CS789
HELLA	8EA011610-531 8EA012527-491 8EA731779-001 8EA738120-001
HERTH+BUSS	42017000
IKA	6.0045.9
ISKRA / LETRIKA	11.131.057 AZE2626 IS1043
KRAUF	STB0789 STV0789
KUHNER	101287 10713 10789 10974 10974V

LOGISTIK	330865
LUCAS	LRS00966 LRS966
MAGNETI MARELLI	063521250350 063720713010 943241136010 944280170000 MQS713 MRS17000 MSN2111 MSR1136
MAHLE	72735676 MS48
MEAT & DORIA	5010154
MERCEDES	0041518701 4151870180 A0041518701 A4151870180
NAPA	NPANSM1282
POWERMAX	8212562 88212562
PRESTOLITE	20500966 M1210E M1210G
REAL	20401511BN 20401511OE 20479902OE
RNL	RNL1700
ROLLCO	STM545
SANDO	6010115.0 6010115.1 6015209.1
SIDAT	S12BH0142A2
SIOM	MAV172090 MAV172100 MAV3020 MAV3430 MAV6450

STARDAX	STX200038 STX200038R
STARLINE	SX 2075
VALEO	455930 726034
VW	020911012P 020911023B 020911023D 020911023DX 020911023P 020911023PX 020911023R 020911024A 020911024AX 020911024C 020911024PX
WAI	17725N 17725R 300.523.093.000 300.523.093.006 300.523.093.010 300.523.093.215 300.523.093.310 300.523.093.390 300.523.093.395 300.523.093.500 300.523.093.508 S132.156 S144.967 S148.514
WILSON	91-15-7034 91-15-7034N
WOODAUTO	MAHMS48 STR50026 STR50488

适用车型

VW

GOLF III Cabriolet (1E7)

1.9 TDI 08/1995-05/1998 1.9 TDI 07/1996-05/1998

1.9 TDI 08/1995-05/1998 1.9 TDI 08/1995-05/1998 1.8 07/1993-05/1998

2.0 07/1993-05/1998 2.0 07/1993-05/1998 1.6 10/1994-02/1998

1.6 10/1994-02/1998 2.0 07/1993-05/1998 1.8 07/1993-05/1998

2.0 07/1993-05/1998 1.8 07/1993-05/1998 1.8 07/1993-05/1998

1.6 10/1994-02/1998 2.0 07/1993-05/1998 1.8 07/1993-05/1998

VENTO (1H2)

1.9 D 11/1991-09/1998 1.9 TDI 09/1993-09/1998 1.9 TDI 09/1993-09/1998

2.8 VR6 01/1992-09/1998 1.9 TDI 09/1993-09/1998

1.9 TD 11/1991-09/1998 1.9 TDI 04/1996-09/1998 1.9 SDI 04/1997-09/1998

2.8 VR6 08/1995-04/1996 1.8 11/1991-09/1998 1.8 11/1991-09/1998

1.8 11/1991-09/1998 1.8 11/1991-09/1998 1.6 10/1994-09/1998

1.6 10/1994-09/1998 1.8 11/1991-09/1998 1.6 10/1994-09/1998

2.0 11/1991-09/1998 2.0 11/1991-09/1998 1.4 11/1991-09/1998

2.0 11/1991-09/1998 1.6 09/1992-09/1998 2.0 11/1991-09/1998

1.6 09/1992-09/1998 2.0 11/1991-09/1998 1.4 11/1991-09/1998

1.6 09/1992-09/1998

PASSAT B3/B4 Variant (3A5, 35I)

2.8 VR6 06/1991-05/1997 1.9 TDI 10/1993-05/1997

1.9 TDI 03/1996-05/1997 1.9 D 05/1989-10/1993 1.9 TD 03/1991-05/1997

2.9 VR6 Syncro 01/1994-05/1997 1.9 TDI 10/1993-05/1997

1.6 07/1994-12/1995 1.6 07/1994-12/1995 2.0 16V 08/1988-09/1993

2.0 03/1995-08/1996 2.0 02/1990-05/1997 2.0 02/1990-05/1997

2.0 02/1990-05/1997 1.8 02/1988-05/1997 1.8 02/1988-05/1997

1.8 02/1988-05/1997 2.0 10/1993-10/1996 2.0 10/1993-10/1996

2.0 10/1993-10/1996

TRANSPORTER T4 Bus (70B, 70C, 7DB, 7DK, 70J, 70K, 7DC, 7DJ)

2.5 09/1990-06/2003
2.5 TDI 09/1995-04/2003
2.4 D 09/1990-04/1998
2.5 09/1990-06/2003
2.5 Syncro 08/1992-04/2003
2.5 09/1990-06/2003
2.5 TDI 09/1995-04/2003
2.4 D Syncro 10/1992-09/1998
2.5 Syncro 08/1992-04/2003
2.5 09/1990-06/2003
2.5 Syncro 08/1992-04/2003
2.5 TDI 09/1995-04/2003
2.5 TDI Syncro 01/1996-04/2003
2.5 TDI 05/1998-04/2003
2.5 TDI 05/1998-04/2003
2.5 08/1996-04/2003
2.5 Syncro 07/1996-04/2003
2.5 08/1996-04/2003
2.5 08/1996-04/2003
2.5 Syncro 07/1996-04/2003
2.5 Syncro 07/1996-04/2003
2.5 TDI Syncro 01/1996-04/2003
2.8 VR6 04/2000-04/2003
2.8 VR6 04/2000-04/2003

PASSAT B5 (3B2)

1.9 TDI 10/1996-11/2000
2.3 VR5 10/1996-11/2000
1.9 TDI 10/1996-11/2000
1.9 TDI Syncro/4motion 06/1997-08/2000
1.9 TDI 08/1998-11/2000
2.3 VR5 Syncro/4motion 10/1997-11/2000
1.9 TDI Syncro/4motion 06/1997-08/2000
1.9 TDI 08/1998-11/2000
1.9 TDI 10/1996-11/2000

GOLF II (19E, 1G1)

1.6 D 08/1983-10/1991
1.6 D 08/1983-10/1991
1.6 10/1986-12/1992
1.6 08/1983-07/1992
1.6 02/1986-10/1991
1.6 08/1983-07/1992
1.6 08/1983-07/1992

GOLF III Variant (1H5)

1.9 TDI 03/1994-04/1999 2.0 07/1993-04/1999 2.0 07/1993-04/1999

2.0 07/1993-04/1999 2.0 07/1993-04/1999 1.9 D 07/1993-04/1999

1.9 TDI 04/1996-04/1999 1.9 TDI 03/1994-04/1999 1.9 TD 07/1993-04/1999

1.9 TDI 03/1994-04/1999 2.9 VR6 Syncro 10/1994-04/1999

1.9 SDI 07/1995-04/1999 1.6 07/1994-04/1999 1.8 07/1993-04/1999

1.8 07/1993-04/1999 1.4 07/1993-04/1999 1.6 07/1994-04/1999

1.4 07/1993-04/1999 1.8 07/1993-04/1999 1.6 07/1994-04/1999

1.8 07/1993-04/1999 1.8 07/1993-04/1999 1.4 07/1993-04/1999

SHARAN (7M8, 7M9, 7M6)

2.8 VR6 Syncro 11/1996-04/2000 2.8 VR6 09/1995-04/2000

2.8 VR6 09/1995-04/2000 2.8 VR6 Syncro 11/1996-04/2000

1.9 TDI 09/1996-04/2000 1.9 TDI 09/1996-04/2000 2.0 09/1995-03/2010

2.0 09/1995-03/2010 1.8 T 20V 09/1997-03/2010

1.8 T 20V 09/1997-03/2010

PASSAT B3/B4 (3A2, 35I)

2.8 VR6 06/1991-08/1996 1.9 TDI 10/1993-08/1996

1.9 TD 03/1991-08/1996 1.9 TDI 03/1996-08/1996 1.9 TDI 10/1993-08/1996

1.9 D 05/1989-10/1993 2.0 16V 08/1988-09/1993 1.6 10/1994-08/1996

1.6 10/1994-08/1996 2.0 03/1995-08/1996 1.8 02/1988-08/1996

2.0 02/1990-08/1996 1.8 08/1990-08/1996 2.0 02/1990-08/1996

2.0 02/1990-08/1996 2.0 02/1990-08/1996 1.8 02/1988-08/1996

1.8 02/1988-08/1996

GOLF III (1H1)

1.9 TDI 04/1996-08/1997 1.9 TDI Syncro (1HX1) 08/1995-08/1997

1.9 TDI 08/1993-08/1997 1.9 D 11/1991-08/1997

1.9 TDI Syncro (1HX1) 08/1995-08/1997

2.9 VR6 Syncro (1HX1) 10/1994-08/1997

1.9 TDI Syncro (1HX1) 08/1995-08/1997 1.9 TD, GTD 11/1991-08/1997

1.9 TDI 08/1993-08/1997 2.8 VR6 01/1992-08/1997

1.9 TDI 08/1993-08/1997 1.9 SDI 07/1995-08/1997

2.8 VR6 08/1995-09/1997 1.8 11/1991-08/1997 1.6 07/1995-08/1997

1.8 11/1991-08/1997 1.8 11/1991-08/1997 1.8 11/1991-08/1997

1.6 07/1995-08/1997 1.8 11/1991-08/1997 1.6 07/1995-08/1997

2.0 GL 08/1995-09/1997 2.0 11/1991-08/1997 1.4 10/1991-08/1997

2.0 11/1991-08/1997 1.6 09/1992-08/1997 2.0 11/1991-08/1997

2.0 11/1991-08/1997 2.0 11/1991-08/1997 1.4 10/1991-08/1997

2.0 11/1991-08/1997 1.6 09/1992-08/1997 1.6 09/1992-08/1997

CADDY II Box Body/MPV (9K9A)

1.9 SDI 11/1995-01/2004 1.9 SDI 11/1995-01/2004

1.9 TDI 09/1996-01/2004 1.9 TDI 09/1996-01/2004

1.9 TDI 09/1996-01/2004 1.9 TDI 09/1996-01/2004 1.9 D 11/1995-01/2004

1.7 SDI 07/1996-09/2000

CADDY I (14)

1.6 D 08/1982-07/1992 1.6 D 08/1982-07/1992 1.6 D 08/1982-07/1992

GOLF I (17)

1.6 D 08/1980-07/1983 1.6 D 08/1980-07/1983 1.5 D 08/1976-07/1980

CORRADO (53I)

2.9 VR6 08/1991-12/1995
2.8 VR6 09/1991-12/1995
2.0 i 04/1993-12/1995
1.8 G60 09/1988-09/1993
2.0 i 04/1993-12/1995
2.0 i 16V 08/1991-12/1995
1.8 16V 04/1989-07/1992

POLO III CLASSIC (6V2)

64 1.9 SDI 12/1995-08/1999
57 1.7 SDI 07/1997-09/2001
68 1.9 SDI 08/1999-01/2002
68 1.9 SDI 08/1999-01/2002
64 1,9 D 01/1996-10/1996
75 1.6 11/1995-09/1997
100 1.6 12/1995-09/2001
100 1.6 12/1995-09/2001
100 1.6 12/1995-09/2001
100 1.6 12/1995-09/2001
100 1.6 12/1995-09/2001
100 1.6 12/1995-09/2001

TRANSPORTER T4 Platform/Chassis (70E, 70L, 70M, 7DE, 7DL, 7D

2.5 08/1996-04/2003
2.5 08/1996-04/2003
2.5 TDI 09/1995-04/2003
2.5 TDI 09/1995-04/2003
2.5 08/1996-04/2003
2.5 TDI 09/1995-04/2003
2.5 TDI 05/1998-04/2003
2.5 TDI 05/1998-04/2003
2.5 TDI Syncro 05/1998-04/2003
2.5 TDI Syncro 05/1998-04/2003
2.8 05/1996-05/2000
2.4 D Syncro 10/1992-09/1998
2.4 D 09/1990-04/1998
2.8 VR6 06/2000-04/2003

TRANSPORTER T4 Van (70A, 70H, 7DA, 7DH)

2.5 Syncro 08/1996-04/2003
2.5 08/1996-04/2003
2.5 11/1990-04/2003
2.5 TDI 09/1995-04/2003
2.5 TDI Syncro 09/1995-04/2003
2.5 11/1990-04/2003
2.5 08/1996-04/2003
2.5 Syncro 08/1996-04/2003
2.5 Syncro 11/1992-11/2001
2.5 08/1996-04/2003

2.5 TDI 09/1995-04/2003 2.5 11/1990-04/2003

2.5 TDI Syncro 09/1995-04/2003 2.5 TDI 09/1995-04/2003

2.5 Syncro 11/1992-11/2001 2.5 Syncro 08/1996-04/2003

2.5 Syncro 11/1992-11/2001 2.5 11/1990-04/2003

2.5 TDI 12/1998-04/2003 2.5 TDI 12/1998-04/2003

2.8 VR6 06/2000-04/2003 2.8 VR6 05/1996-05/2000

2.8 VR6 06/2000-04/2003 2.4 D 07/1990-04/1998

2.4 D Syncro 10/1992-09/1998

GOLF IV (1J1)

1.4 16V 10/1997-05/2004 1.9 TDI 10/1997-05/2004 2.3 V5 08/1997-10/2000

1.4 16V 10/1997-05/2004 1.9 TDI 4motion 07/1998-04/2002

1.4 16V 10/1997-05/2004 1.4 16V 10/1997-05/2004

1.9 SDI 08/1997-06/2005 1.9 TDI 08/1997-05/2004

1.9 TDI 10/1997-05/2004 1.9 SDI 08/1997-06/2005

1.4 16V 10/1997-05/2004 1.9 TDI 08/1997-05/2004

1.9 TDI 4motion 11/2000-06/2005 1.9 TDI 4motion 09/1999-06/2001

1.9 TDI 11/2000-06/2005 2.3 V5 4motion 12/1998-10/2000

1.9 TDI 12/1998-06/2001 1.9 TDI 12/1998-06/2001

1.9 TDI 4motion 09/1999-06/2001 1.6 08/2000-06/2005

2.3 V5 10/2000-06/2005 2.3 V5 4motion 10/2000-06/2005

1.6 08/2000-06/2005

BORA I (1J2)

1.9 TDI 10/1998-05/2005 1.4 16V 03/2000-05/2005 2.3 V5 10/1998-10/2000

1.9 SDI 10/1998-05/2005 1.9 TDI 10/1998-06/2001

1.4 16V 03/2000-05/2005 1.9 SDI 10/1998-05/2005

1.4 16V 03/2000-05/2005 1.4 16V 03/2000-05/2005

1.4 16V 03/2000-05/2005 1.9 TDI 10/1998-06/2001

1.9 TDI 10/1998-05/2005 2.3 V5 4motion 12/1998-10/2000

1.9 TDI 4motion 11/2000-05/2005 1.9 TDI 12/1998-01/2002

1.9 TDI 4motion 02/1999-06/2001 1.9 TDI 11/2000-05/2005

1.9 TDI 4motion 02/1999-06/2001 1.9 TDI 12/1998-01/2002

1.9 TDI 4motion 11/1998-04/2002 2.3 V5 4motion 10/2000-05/2005

2.3 V5 10/2000-05/2005

GOLF IV Cabriolet (1E7)

1.9 TDI 06/1998-06/2002 1.9 TDI 06/1998-06/2002

NEW BEETLE (9C1, 1C1)

1.9 TDI 01/1998-06/2004 1.6 06/2000-09/2010 1.6 06/2000-09/2010

1.8 T 10/1999-09/2010 1.8 T 10/1999-09/2010 1.8 T 10/1999-09/2010

1.8 T 10/1999-09/2010 1.8 T 10/1999-09/2010 1.8 T 10/1999-09/2010

POLO Variant (6V5)

1.9 SDI 06/1997-09/2001 1.7 SDI 08/1997-09/2001

1.9 SDI 08/1999-09/2001 1.9 SDI 08/1999-09/2001 1.6 05/1997-09/2001

1.6 05/1997-09/2001 1.6 05/1997-09/2001 1.6 05/1997-09/2001

1.6 05/1997-09/2001

GOLF IV Variant (1J5)

1.9 TDI 4motion 11/2000-06/2006 2.3 V5 4motion 05/1999-06/2006

2.3 V5 05/1999-06/2006 1.4 16V 05/1999-06/2006 1.9 TDI 08/1999-06/2001

1.9 TDI 05/1999-06/2001 1.4 16V 05/1999-06/2006

1.4 16V 05/1999-06/2006 1.9 SDI 05/1999-06/2006

1.9 TDI 4motion 05/1999-04/2002 1.9 TDI 08/1999-06/2001

1.4 16V 05/1999-06/2006 1.9 TDI 05/1999-05/2006

1.9 TDI 05/1999-05/2006 1.9 TDI 4motion 12/1999-04/2001

1.9 SDI 05/1999-06/2006 1.9 TDI 05/1999-06/2001

1.9 TDI 11/2000-06/2006 1.4 16V 05/1999-06/2006

1.9 TDI 4motion 12/1999-04/2001 2.3 V5 10/2000-06/2006

2.3 V5 4motion 10/2000-06/2006

BORA Variant (1J6)

1.9 TDI 4motion 05/1999-06/2001 2.3 V5 4motion 05/1999-10/2000

1.9 TDI 11/2000-05/2005 1.9 TDI 07/2004-05/2005

1.9 TDI 4motion 05/1999-06/2001 1.9 TDI 05/1999-06/2001

1.9 TDI 05/1999-06/2001 1.9 TDI 05/1999-06/2001

1.9 TDI 07/2004-05/2005 2.3 V5 05/1999-10/2000 1.9 TDI 05/1999-06/2001

1.9 TDI 4motion 11/2000-05/2005 1.4 16V 09/2001-05/2005

1.4 16V 09/2001-05/2005 1.4 16V 09/2001-05/2005

1.4 16V 09/2001-05/2005 1.4 16V 09/2001-05/2005 2.3 V5 10/2000-05/2005

2.3 V5 4motion 10/2000-05/2005

CADDY II MPV (9K9B)

1.7 SDI 07/1996-09/2000 1.9 D 11/1995-01/2004 1.9 SDI 11/1995-01/2004

1.9 SDI 11/1995-01/2004

POLO IV (9N_, 9A_)

1.9 TDI 11/2003-11/2009 1.9 TDI 11/2003-11/2009

GOLF VAN IV Variant (1J5)

1.9 TDI 05/1999-05/2006 1.9 SDI 05/1999-05/2006

1.9 TDI 05/1999-05/2006 1.9 TDI 05/1999-05/2006

1.9 TDI 05/1999-05/2006

GOLF III Van (1H1)

1.9 D 08/1991-07/1995 1.9 SDI 08/1995-09/1997 1.9 TDI 08/1991-09/1997

GOLF IV Van (1J1)

1.9 TDI 05/2000-09/2002 1.9 TDI 10/1997-05/2004

1.9 SDI 11/1998-05/2004

POLO Van Estate Van (6V5)

1.9 SDI 10/1999-09/2001 1.7 SDI 08/1997-12/1999

1.9 SDI 12/1995-08/1999 1.9 SDI 10/1999-09/2001

GOLF Van III Variant (1H5)

1.9 TDI 05/1996-02/1999 1.9 SDI 07/1995-02/1999 1.9 08/1993-02/1999

1.9 TDI 08/1993-12/1999 1.9 TDI 08/1993-12/1999

SHARAN VAN (7M_)

2.8 VR6 (7M8) 09/1996-04/2000 1.9 TDI (7M8) 09/1996-05/2003

PASSAT B3/B4 (315, 3A5)

1.9 TD 10/1993-12/1996

JETTA II (19E, 1G2, 165)

1.6 01/1984-07/1992 1.6 03/1986-10/1991 1.6 10/1986-10/1991

1.6 01/1984-07/1992 1.6 01/1984-07/1992

JETTA I (16)

1.6 TD 03/1982-02/1984

GOLF I Cabriolet (155)

1.6 08/1983-04/1992 1.6 08/1983-04/1992

PASSAT B5 Variant (3B5)

1.9 TDI 08/1998-11/2000 1.9 TDI 06/1997-11/2000

1.9 TDI Syncro/4motion 06/1997-08/2000 1.9 TDI 08/1998-11/2000

1.9 TDI 06/1997-11/2000 1.9 TDI Syncro/4motion 06/1997-08/2000

NEW BEETLE Convertible (1Y7)

2.0 09/2002-10/2010 2.0 09/2002-10/2010 2.0 09/2002-10/2010

2.0 09/2002-10/2010

FORD

GALAXY I (WGR)

2.8 i V6 11/1995-04/2000 2.8 i V6 4x4 04/1996-04/2000

2.8 i V6 4x4 04/1996-04/2000 1.9 TDI 03/1995-05/2006

1.9 TDI 03/1995-05/2006 2.8 i V6 11/1995-04/2000 2.0 i 11/1995-05/2006

1.9 TDI 03/1995-05/2006 2.0 i 11/1995-05/2006 1.9 TDI 08/1997-04/2000

2.3 16V 01/1997-05/2006 1.9 TDI 08/1997-04/2000

2.3 16V 01/1997-05/2006 2.3 16V 09/2001-05/2006

GALAXY MK I VAN (WGR)

2.3 11/2002-03/2006 2.3 05/2000-10/2002 2.8 11/1995-07/2000

1.9 TDi 09/1996-03/2006 1.9 TDi 09/1996-03/2006

SEAT

IBIZA II (6K1)

1.9 TD 03/1993-08/1996 1.9 SDI 08/1996-08/1999 1.9 TDI 02/1997-02/2002

1.9 TDI 08/1996-02/2002 1.9 TDI 08/1996-02/2002

1.9 TDI 08/1996-02/2002 1.9 TDI 08/1996-02/2002

1.9 TDI 02/1997-02/2002 1.9 D 04/1993-06/1999 1.9 SDI 08/1999-02/2002

1.9 SDI 08/1999-02/2002 1.8 i 03/1993-08/1999 1.8 i 03/1993-08/1999

1.8 i 16V 11/1993-08/1996 1.8 i 03/1993-08/1999 2.0 i 03/1993-08/1999

2.0 i 03/1993-08/1999 1.6 i 04/1996-02/2002 1.6 i 03/1993-02/2002

1.6 i 03/1993-02/2002 1.6 i 04/1996-02/2002 1.6 i 03/1993-02/2002

1.6 i 04/1996-02/2002 1.6 i 04/1996-02/2002 1.6 i 04/1996-02/2002

1.6 i 09/1994-06/1999

CORDOBA (6K1, 6K2)

1.9 TD 02/1993-08/1996 1.9 SDI 08/1996-06/1999 1.9 D 02/1993-08/1996

1.9 D 01/1996-08/1996 1.9 SDI 06/1999-10/2002 1.9 SDI 06/1999-10/2002

1.8 i 16V 10/1993-08/1996 2.0 i 02/1993-06/1999 1.8 i 02/1993-09/2002

1.8 i 02/1993-09/2002 2.0 i 02/1993-06/1999 1.8 i 02/1993-09/2002

1.6 i 07/1996-10/2002 1.6 i 07/1996-10/2002 1.6 i 07/1996-10/2002

1.6 i 02/1993-10/2002 1.6 i 02/1993-10/2002 1.6 i 07/1996-10/2002

1.6 i 02/1993-10/2002 1.6 i 07/1996-10/2002 1.6 i 05/1994-06/1999

TOLEDO I (1L2)

1.9 TDI 08/1995-03/1999 | 1.9 TDI 08/1995-03/1999 | 1.9 D 05/1991-03/1999

1.9 TD 05/1991-03/1999 | 1.9 TDI 11/1996-03/1999 | 1.9 D 12/1995-03/1999

1.8 i 11/1993-12/1996 | 1.6 i 05/1991-03/1999 | 1.6 i 05/1991-03/1999

1.8 i 11/1993-12/1996 | 1.8 16V 05/1991-03/1999 | 1.8 i 11/1993-12/1996

1.8 16V 05/1991-03/1999 | 2.0 i 05/1991-03/1999 | 1.8 i 05/1991-12/1996

2.0 i 05/1991-03/1999

INCA (6K9)

1.9 D 11/1995-06/2003 | 1.9 SDI 11/1995-06/2003 | 1.9 SDI 11/1995-06/2003

1.7 D 09/1996-06/2003 | 1.6 i 11/1995-05/1998

ALHAMBRA (7V8, 7V9)

1.9 TDI 08/1996-06/2000 | 1.9 TDI 08/1996-06/2000 | 2.0 i 04/1996-03/2010

2.0 i 04/1996-03/2010

CORDOBA Vario (6K5)

1.9 TDI 08/1996-12/2002 | 1.9 TDI 08/1996-12/2002

1.9 TDI 07/1997-12/2002 | 1.9 TDI 08/1996-12/2002

1.9 TDI 07/1997-12/2002 | 1.9 TDI 08/1996-12/2002

1.9 SDI 09/1996-06/1999 | 1.9 SDI 06/1999-12/2002

1.9 SDI 06/1999-12/2002 | 1.6 i 05/1997-06/1999 | 1.6 i 09/1996-12/2002

1.6 i 09/1996-12/2002 | 1.6 i 09/1996-12/2002 | 1.6 i 09/1996-12/2002

1.6 i 09/1996-12/2002

TOLEDO II (1M2)

2.3 V5 10/1998-11/2000 | 1.9 TDI 10/1998-07/2004 | 1.9 TDI 03/1999-07/2004

1.9 TDI 03/1999-07/2004 1.9 TDI 10/1998-07/2004

2.3 V5 20V 09/2000-11/2003 1.4 16V 01/2000-05/2002

1.4 16V 01/2000-05/2002 1.4 16V 01/2000-05/2002

1.4 16V 01/2000-05/2002 1.9 TDI 05/2003-05/2006

LEON (1M1)

1.9 SDI 11/1999-06/2006 1.9 TDI 11/1999-06/2006

1.9 TDI 11/1999-06/2006

CORDOBA (6L2)

1.9 TDI 10/2002-11/2009 1.9 TDI 10/2002-11/2009

ALHAMBRA VAN (7V8, 7V9)

TDI 09/1997-02/2002

LEON (1P1)

1.9 TDI 06/2007-12/2010

AUDI

A3 (8L1)

1.9 TDI 09/1996-07/2001 1.9 TDI 09/1996-07/2001

S3 quattro 03/1999-04/2002 1.9 TDI 08/1997-07/2001

S3 quattro 03/1999-04/2002 1.9 TDI 08/1997-07/2001

S3 quattro 03/1999-04/2002 1.9 TDI 08/2000-05/2003

1.9 TDI quattro 08/2000-05/2003 1.8 09/1996-05/2003

1.8 T 12/1996-05/2003 1.8 09/1996-05/2003 1.8 T 12/1996-05/2003

1.6 09/1996-05/2003 1.8 T 12/1996-05/2003 1.8 T 12/1996-05/2003

1.6 09/1996-05/2003 1.6 09/1996-05/2003 1.8 T quattro 12/1996-05/2003

1.8 T quattro 12/1996-05/2003 1.8 T quattro 12/1996-05/2003

SKODA

OCTAVIA I (1U2)

1.9 TDI 09/1996-03/2010 1.9 SDI 06/1997-12/2003

1.9 TDI 08/1997-01/2006 1.9 SDI 06/1997-12/2003

1.9 TDI 09/1996-03/2010 1.9 TDI 08/1997-01/2006 1.6 02/1997-12/2007

1.8 09/1996-07/2000 1.6 02/1997-12/2007

OCTAVIA I Combi (1U5)

1.9 SDI 07/1998-12/2003 1.9 TDI 07/1998-03/2010

1.9 TDI 07/1998-03/2010 1.9 TDI 07/1998-01/2006

1.9 SDI 07/1998-12/2003 1.9 TDI 07/1998-01/2006

1.9 TDI 4x4 11/1999-02/2006 1.6 07/1998-12/2007 1.6 07/1998-12/2007

OCTAVIA I Estate Van (1U5)

1.9 D 08/2000-12/2003 1.9 TDI 08/2000-03/2010

MERCEDES-BENZ

V-CLASS (638/2)

V 280 (638.244, 638.294) 08/1997-07/2003

V-CLASS Van (638/2)

V 280 (638.244) 07/1997-07/2003

HYUNDAI

PONY / EXCEL Saloon (X-2)

1.3 09/1989-08/1994