SINTLY

SINTLY | STARTER MOTOR

XTLSTR0164

VOLTAGE 12 V

POWER 1.70 kW

APPLICATIONS AUDI, SEAT, SKODA, VW

DIMENSIONS

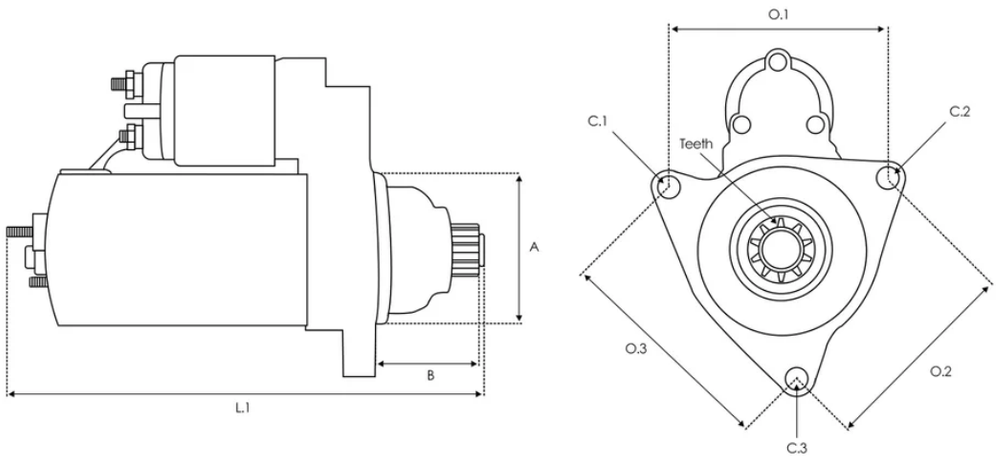

A 76.00 mm B 42.50 mm Teeth 10 qty. L.1 243.00 mm O.1 118.00 mm C.1 11.00 mm C.2 11.00 mm

OE 编号

AS-PL	S0253

替代编码

3EFFE	PRSS002 PRSS002B STRS002 STRS002B STRS002NE

A.Z. MEISTERTEILE	AZMT-53-010-1038
ACAUTO	AC-CBS1286
AINDE	AI-80021
ALANKO	10441261
ANDEL	ANM22500 ANM22500X
APEC	ASM1488
ATL AUTOTECHNIK	A20280
AUTO MAGNETO	AM-2317
AUTOTEAM	SBO256 SBO256A
BORG & BECK	BST2004
BOSCH	0001123016 0001123017 0986020280
BOVEZ	STA0344R
BTS TURBO	S512215
CARGO	113509 F032113509
CASCO	CST10256AS CST10256GS
CEVAM	3041

COMLINE	CMA-621054
DENSO	DSN3008
DRI	311203102
DTS	S-50252
ELECTROLOG	STR1406
ELSTOCK	25-3218
ELTA AUTOMOTIVE	EZ0587
ERA	220606
EUROREPAR	1638121080
EUROTEC	11020280
FARCOM	105281
FEBI BILSTEIN	188514
FRIESEN	8020280
GHIBAUDI	SG0696
HC PARTS	CS1286
HELLA	8EA012526-191

HENKEL PARTS	3116817 3116818
HERTH+BUSS	42020280
HOFFER	H5010103
IKA	6.7013.1
ITAB AUTOMOTIVE	10010256AV 10010256OV
KUHNER	101286 101286B
LE PART	LES0564
LOGISTIK	331411
LUCAS	LRS01672 LRS1672
MAGNETI MARELLI	063521230160 063521230360 063721286010 359001400100 943212861010 944280202800 MO0010MA MQS1286 MRS20280 MSN2106 MSRC1286
MAPCO	13981
MEAT & DORIA	5010103
NAPA	NPANSM1488
NK	4720290
POWERMAX	88212628

PROTECH	IR9664
REAL	20401652BN 20401652OE
REMANTE	011-001-000059R
RIDEX	2S0020 2S0020R
ROLLCO	STM952
SANDO	6010256.0 6010256.1
SIDAT	S12BH0116 S12BH0116A2
SIOM	MAV122560 MAV122560A
STARDAX	STX200056 STX200056R
STARK	SKSTR-0330019
TMI	ST01282
VALEO	201060 458727
VW	02E911023H 02E911023HX 02E911023L 02E911023LX 2E911023H 2E911023HX
WAI	17971N 300.549.102.010 300.549.102.018 300.549.102.210 300.549.102.215 300.549.102.280 S132.335 S145.418
WILMINK GROUP	WG2013170 WG2013171 WG2170229

	WG2196587 WG2372484
WILSON	91-15-7239
WOODAUTO	BOS0001123016 SEG0001123016 STR50252

适用车型

VW

PASSAT B7 Variant (365)

3.6 FSI 4motion 01/2011-12/2014

PASSAT B7 (362)

3.6 FSI 4motion 01/2011-12/2014

CC B7 (358)

3.6 FSI 4motion 11/2011-12/2016

PASSAT B6 (3C2)

3.2 FSI 4motion 11/2005-07/2010
3.6 R36 4motion 04/2007-07/2010
2.0 TDI 11/2005-05/2007
2.0 TDI 08/2005-07/2006
2.0 TDI 08/2005-05/2009
2.0 TDI 08/2005-07/2010
2.0 TDI 16V 03/2005-07/2010
2.0 TDI 16V 4motion 03/2005-08/2010
2.0 TDI 08/2005-07/2010
2.0 TDI 16V 03/2005-07/2010
2.0 TDI 16V 4motion 03/2005-08/2010
2.0 TDI 03/2005-05/2009
2.0 TDI 03/2005-11/2010
2.0 BlueTDI 01/2009-11/2010
2.0 TDI 03/2005-11/2010
2.0 TDI 4motion 03/2005-05/2009

2.0 TDI 4motion 05/2009-07/2010

PASSAT B6 Variant (3C5)

3.2 FSI 4motion 11/2005-11/2010

3.6 R36 4motion 04/2007-11/2010

2.0 TDI 08/2005-02/2006

2.0 TDI 4motion 08/2005-05/2009

2.0 TDI 08/2005-05/2009

2.0 TDI 11/2005-05/2007

2.0 TDI 16V 08/2005-11/2010

2.0 TDI 08/2005-11/2010

2.0 TDI 16V 4motion 08/2005-11/2010

2.0 TDI 08/2005-11/2010

2.0 TDI 16V 4motion 08/2005-11/2010

2.0 TDI 08/2005-11/2010

2.0 TDI 16V 08/2005-11/2010

2.0 TDI 08/2005-11/2010

2.0 BlueTDI 01/2009-11/2010

2.0 TDI 08/2005-05/2009

2.0 TDI 4motion 05/2009-11/2010

GOLF VI (5K1)

2.0 TDI 10/2008-11/2012

2.0 TDI 10/2008-11/2012

2.0 TDI 10/2008-05/2013

2.0 TDI 04/2009-11/2012

2.0 TDI 10/2008-05/2013

2.0 TDI 10/2008-05/2013

2.0 TDI 04/2009-11/2012

2.0 TDI 4motion 05/2009-11/2012

2.0 TDI 4motion 05/2009-11/2012

2.0 TDI 10/2008-11/2012

2.0 TDI 10/2008-11/2012

PASSAT CC B6 (357)

3.6 FSI 4motion 02/2008-12/2011

2.0 TDI 06/2008-01/2012

2.0 TDI 06/2008-05/2011

2.0 TDI 06/2008-01/2012

2.0 TDI 06/2008-05/2011

2.0 TDI 06/2008-01/2012

2.0 TDI 06/2008-01/2012

2.0 TDI 06/2008-01/2012

2.0 TDI 4motion 08/2009-01/2012 2.0 TDI 4motion 11/2009-01/2012

2.0 TDI 4motion 08/2009-01/2012 2.0 TDI 4motion 11/2009-01/2012

2.0 BlueTDI 05/2009-11/2010

EOS (1F7, 1F8)

3.6 V6 05/2009-11/2010 3.2 V6 06/2006-05/2009 3.2 V6 06/2006-05/2009

2.0 TDI 16V 05/2008-08/2015 2.0 TDI 16V 05/2008-08/2015

2.0 TFSI 03/2006-08/2015 2.0 TFSI 03/2006-08/2015

2.0 TFSI 03/2006-08/2015 2.0 TFSI 03/2006-08/2015

2.0 TFSI 03/2006-08/2015 2.0 TDI 06/2006-05/2008

2.0 TFSI 03/2006-08/2015

GOLF PLUS V (5M1, 521)

2.0 TDI 01/2009-12/2013 2.0 TDI 01/2009-12/2013

2.0 TDI 16V 01/2005-12/2013 2.0 TDI 16V 01/2005-12/2013

2.0 TDI 05/2005-12/2013 2.0 TDI 05/2005-12/2013

2.0 TDI 05/2005-12/2013 2.0 TDI 16V 01/2005-12/2013

2.0 TDI 05/2005-05/2007 2.0 TDI 12/2005-05/2011

1.9 TDI 01/2005-01/2009 1.9 TDI 01/2005-01/2009

1.9 TDI 01/2005-01/2009

GOLF VI Variant (AJ5)

2.0 TDI 01/2010-07/2013 2.0 TDI 07/2009-07/2013

2.0 TDI 07/2009-07/2013 2.0 TDI 07/2009-07/2013

JETTA IV (162, 163, AV3, AV2)

2.0 TDI 10/2010-12/2017 2.0 TDI 10/2010-12/2017

SCIROCCO III (137, 138)

2.0 TDI 08/2008-11/2017 2.0 TDI 08/2008-11/2017

2.0 TDI 05/2009-11/2017 2.0 TDI 05/2009-11/2017

JETTA III (1K2)

1.4 TSI 07/2008-10/2010 2.0 TDI 16V 08/2005-10/2010

2.0 TDI 16V 08/2005-10/2010 2.0 TDI 16V 08/2005-10/2010

1.9 TDI 08/2005-10/2010 2.0 TDI 16V 08/2005-10/2010

1.9 TDI 08/2005-10/2010 1.9 TDI 08/2005-10/2010

2.0 TDI 09/2005-10/2010 2.0 TDI 10/2006-10/2010

2.0 TDI 10/2006-10/2010 2.0 TDI 10/2005-10/2010

2.0 TDI 09/2005-10/2010

TOURAN (1T3)

1.4 TSI EcoFuel 05/2010-05/2015

SCIROCCO Van (137)

2.0 TDi 05/2009-05/2014 2.0 TDi 08/2008-05/2014

2.0 TDi 05/2009-05/2014 2.0 TDi 08/2008-05/2014

GOLF VAN VI Variant (AJ5)

2.0 TDi 07/2009-05/2014 2.0 TDi 07/2009-05/2014

GOLF VI Van (5K1)

2.0 TDi 09/2009-11/2012 2.0 TDi 09/2009-11/2012

2.0 TDi 05/2010-11/2012

GOLF PLUS Van (521)

2.0 TDi 11/2009-08/2014

TOURAN VAN (1T3)

1.4 TSi EcoFuel 05/2010-05/2015

CADDY III Box Body/MPV (2KA, 2KH, 2CA, 2CH)

1.9 TDI 4motion 11/2008-08/2010
1.9 TDI 04/2004-08/2010

1.9 TDI 04/2004-08/2010

TOURAN (1T1, 1T2)

1.9 TDI 02/2003-05/2004
1.9 TDI 08/2003-05/2010

1.9 TDI 11/2004-05/2010
1.9 TDI 08/2003-05/2010

2.0 TDI 02/2003-05/2010
2.0 TDI 12/2005-05/2010

1.9 TDI 11/2004-05/2010
2.0 TDI 12/2005-05/2010

1.9 TDI 08/2003-05/2010
1.9 TDI 11/2004-05/2010

2.0 TDI 16V 08/2003-05/2010
2.0 TDI 12/2005-05/2010

1.4 TSI EcoFuel 05/2009-05/2010

GOLF V (1K1)

3.2 R32 4motion 11/2005-11/2008
2.0 TDI 16V 4motion 08/2004-11/2008

2.0 TDI 16V 10/2003-11/2008
2.0 TDI 11/2005-11/2008

2.0 TDI 10/2003-11/2008
3.2 R32 4motion 11/2005-11/2008

2.0 TDI 12/2004-11/2008
2.0 TDI 4motion 01/2007-11/2008

1.9 TDI 10/2003-11/2008
1.9 TDI 4motion 08/2004-11/2008

1.9 TDI 4motion 08/2004-11/2008
1.9 TDI 10/2003-11/2008

1.9 TDI 4motion 08/2004-11/2008
1.9 TDI 10/2003-11/2008

CADDY III MPV (2KB, 2KJ, 2CB, 2CJ)

1.9 TDI 04/2004-08/2010
1.9 TDI 04/2004-08/2010

GOLF V Variant (1K5)

2.0 TDI 06/2007-07/2009 2.0 TDI 06/2007-07/2009

2.0 TDI 16V 06/2007-07/2009 2.0 TDI 16V 06/2007-07/2009

2.0 TDI 06/2007-07/2009 1.9 TDI 06/2007-07/2009

1.9 TDI 06/2007-07/2009 1.9 TDI 4motion 01/2008-07/2009

TOURAN VAN (1T1, 1T2)

1.9 TDI 08/2003-11/2006 1.9 TDI 08/2003-11/2006

NEW BEETLE (9C1, 1C1)

1.9 TDI 02/2001-09/2010 1.9 TDI 02/2001-09/2010

1.9 TDI 02/2001-09/2010

GOLF IV (1J1)

1.9 TDI 4motion 09/2000-06/2005 1.9 TDI 09/2000-06/2005

1.9 TDI 09/2000-06/2005 1.9 TDI 09/2000-06/2005

3.2 R32 4motion 09/2002-06/2005 3.2 R32 4motion 09/2002-06/2005

3.2 R32 4motion 09/2002-06/2005

NEW BEETLE Convertible (1Y7)

1.8 T 01/2003-09/2010 1.9 TDI 06/2003-07/2005 1.8 T 01/2003-09/2010

1.8 T 01/2003-09/2010

SKODA

SUPERB II Estate (3T5)

2.0 TFSI 05/2010-05/2015
2.0 TDI 16V 4x4 11/2010-05/2015
3.6 V6 4x4 10/2009-05/2015
2.0 TDI 10/2009-03/2010
2.0 TDI 16V 10/2009-05/2015
2.0 TDI 16V 10/2009-05/2015
2.0 TDI 16V 10/2009-05/2015
2.0 TDI 4x4 10/2009-05/2015
2.0 TDI 10/2009-05/2015
2.0 TDI 10/2009-05/2015
2.0 TDI 4x4 10/2009-05/2015

SUPERB II (3T4)

2.0 TFSI 05/2010-05/2015
1.8 TSI 03/2009-05/2015
2.0 TDI 16V 4x4 11/2010-05/2015
1.8 TSI 4x4 03/2009-05/2015
3.6 FSI 4x4 11/2008-05/2015
2.0 TDI 03/2008-05/2010
2.0 TDI 4x4 09/2008-05/2015
2.0 TDI 07/2008-05/2015
2.0 TDI 4x4 09/2008-05/2015
2.0 TDI 07/2008-05/2015
2.0 TDI 16V 01/2009-05/2015
2.0 TDI 16V 01/2009-05/2015
2.0 TDI 16V 01/2009-05/2015

OCTAVIA II Combi (1Z5)

2.0 TDI 16V 02/2004-05/2013
2.0 TDI 16V 02/2004-05/2013
2.0 TDI 16V 02/2004-05/2013
2.0 TDI 4x4 07/2006-05/2010
2.0 TDI RS 04/2006-02/2013
2.0 TDI RS 04/2006-02/2013
2.0 TDI 11/2005-05/2010
2.0 TDI 16V 02/2004-05/2010
1.9 TDI 09/2004-12/2010
1.9 TDI 09/2004-12/2010

1.9 TDI 4x4 11/2004-12/2010 1.9 TDI 4x4 11/2004-12/2010

1.9 TDI 09/2004-12/2010 1.9 TDI 09/2004-12/2010

1.9 TDI 4x4 11/2004-12/2010 2.0 TDI 16V 4x4 05/2010-02/2013

2.0 TDI 16V 4x4 05/2010-02/2013 2.0 TDI 16V 4x4 05/2010-02/2013

OCTAVIA II (1Z3)

2.0 TDI 16V 02/2004-04/2013 2.0 TDI 16V 02/2004-04/2013

2.0 TDI 16V 02/2004-04/2013 2.0 TDI RS 04/2006-02/2013

2.0 TDI RS 04/2006-02/2013 2.0 TDI 02/2004-05/2010

2.0 TDI 11/2005-05/2010 1.9 TDI 06/2004-12/2010

1.9 TDI 06/2004-12/2010 1.9 TDI 06/2004-12/2010

1.9 TDI 06/2004-12/2010

AUDI

A3 Sportback (8PA)

3.2 V6 quattro 09/2004-05/2009 3.2 V6 quattro 09/2004-05/2009

3.2 V6 quattro 09/2004-05/2009 1.9 TDI 09/2004-05/2010

2.0 TDI 09/2004-03/2013 1.9 TDI 09/2004-05/2010

2.0 TDI 09/2004-03/2013 2.0 TDI 09/2004-03/2013

2.0 TDI 16V 09/2004-03/2013 2.0 TDI quattro 03/2006-03/2013

2.0 TDI 16V quattro 11/2005-03/2013 1.9 TDI 09/2004-05/2010

2.0 TDI 16V quattro 11/2005-03/2013 2.0 TDI 03/2006-03/2013

2.0 TDI 03/2006-03/2013 2.0 TDI 16V 09/2004-03/2013

2.0 TDI 16V quattro 11/2005-03/2013 2.0 TDI 16V 09/2004-03/2013

2.0 TDI quattro 03/2006-03/2013 2.0 TDI 03/2006-03/2013

2.0 TDI 16V 09/2004-03/2013 2.0 TDI 16V 09/2004-03/2013

2.0 TDI quattro 03/2006-03/2013 2.0 TDI quattro 01/2006-06/2008

2.0 TDI 06/2005-06/2008 2.0 TDI 06/2006-06/2008

TT (8J3)

3.2 V6 quattro 08/2006-06/2010 3.2 V6 quattro 08/2006-06/2010

TT Roadster (8J9)

3.2 V6 quattro 03/2007-06/2010 3.2 V6 quattro 03/2007-06/2010

TT Roadster (8N9)

1.8 T 01/2001-06/2006 1.8 T 09/2005-06/2006

3.2 VR6 quattro 07/2003-06/2006 1.8 T 09/2005-06/2006

3.2 VR6 quattro 07/2003-06/2006 1.8 T quattro 02/2000-06/2006

1.8 T quattro 02/2000-06/2006 1.8 T 10/1999-06/2006

1.8 T 10/1999-06/2006 1.8 T 10/1999-06/2006

1.8 T quattro 10/1999-06/2006 1.8 T quattro 10/1999-06/2006

1.8 T 10/1999-06/2006 1.8 T quattro 02/2000-06/2006

1.8 T 10/1999-06/2006 1.8 T quattro 10/1999-06/2006

1.8 T quattro 09/2005-06/2006

TT (8N3)

1.8 T 09/2005-06/2006 3.2 VR6 quattro 07/2003-06/2006

3.2 VR6 quattro 07/2003-06/2006 1.8 T 09/2005-06/2006

1.8 T 09/2002-06/2006 1.8 T 10/1998-06/2006 1.8 T 10/1998-06/2006

1.8 T 10/1998-06/2006 1.8 T 10/1998-06/2006 1.8 T 10/1998-06/2006

1.8 T quattro 09/2005-06/2006

A3 (8P1)

3.2 V6 quattro 07/2003-05/2009 2.0 TDI 16V 05/2003-08/2012

2.0 TDI quattro 05/2003-06/2008 2.0 TFSI 09/2004-08/2012

2.0 TDI 05/2003-08/2012 2.0 TDI 16V 05/2003-08/2012

2.0 TDI quattro 03/2006-08/2012 3.2 V6 quattro 07/2003-05/2009

2.0 TFSI 09/2004-08/2012 2.0 TFSI quattro 09/2004-08/2012

2.0 TDI 05/2003-08/2012 2.0 TDI quattro 03/2006-08/2012

2.0 TDI 03/2006-08/2012 2.0 TDI quattro 03/2006-08/2012

2.0 TFSI quattro 09/2004-08/2012 2.0 TDI 03/2006-08/2012

2.0 TFSI quattro 09/2004-08/2012 2.0 TDI 05/2003-08/2012

2.0 TFSI quattro 09/2004-08/2012 2.0 TFSI 09/2004-08/2012

2.0 TDI 16V quattro 08/2004-08/2012 3.2 V6 quattro 07/2003-05/2009

2.0 TFSI quattro 09/2004-08/2012 2.0 TDI 16V quattro 08/2004-08/2012

2.0 TFSI 09/2004-08/2012 2.0 TDI 16V 05/2003-08/2012

2.0 TDI 16V quattro 08/2004-08/2012 2.0 TDI 03/2006-08/2012

2.0 TDI 16V 05/2003-08/2012 2.0 TDI 16V 05/2003-08/2012

2.0 TDI 06/2005-06/2008 2.0 TDI quattro 01/2006-06/2008

2.0 TDI 06/2006-06/2008 1.9 TDI 05/2003-05/2010

1.9 TDI 05/2003-05/2010 1.9 TDI 05/2003-05/2010

A3 Convertible (8P7)

2.0 TDI 04/2008-05/2013 2.0 TDI 04/2008-05/2013

2.0 TDI 04/2008-05/2013 2.0 TDI 04/2008-05/2013

SEAT

ALTEA (5P1)

2.0 TDI	03/2006-05/2010	2.0 TDI	03/2004-05/2009
2.0 TDI	03/2006-05/2010	1.9 TDI	04/2004-12/2010
2.0 TDI 16V	03/2004-07/2015	1.9 TDI	04/2004-12/2010
2.0 TDI 16V	03/2004-07/2015	1.9 TDI	04/2004-12/2010
1.9 TDI	04/2004-12/2010	2.0 TDI	11/2005-11/2010

LEON (1P1)

1.9 TDI	07/2005-12/2010	2.0 TDI	05/2006-12/2012
2.0 TDI	05/2006-12/2012	2.0 TDI 16V	07/2005-12/2012
1.9 TDI	07/2005-12/2010	2.0 TDI 16V	07/2005-12/2012
2.0 TDI 16V	07/2005-12/2012	2.0 TDI	05/2006-12/2012
1.9 TDI	07/2005-12/2010	2.0 TDI	10/2005-10/2010
2.0 TDI	07/2005-05/2010	1.9 TDI	06/2007-12/2010

TOLEDO III (5P2)

2.0 TDI 16V	04/2004-05/2009	1.9 TDI	10/2004-05/2009
1.9 TDI	10/2004-05/2009	1.9 TDI	10/2004-05/2009
1.9 TDI	10/2004-05/2009	2.0 TDI	11/2005-05/2009
2.0 TDI	09/2004-05/2009		

ALTEA XL (5P5, 5P8)

2.0 TDI 16V	10/2006-07/2015	2.0 TDI	06/2007-12/2013

2.0 TDI 16V 10/2006-07/2015

1.9 TDI 10/2006-12/2010

2.0 TDI 11/2006-03/2009

2.0 TDI 06/2007-12/2013

2.0 TDI 4x4 06/2007-06/2013

1.9 TDI 10/2006-12/2010

1.9 TDI 10/2006-12/2010

2.0 TDI 4x4 06/2007-06/2013

2.0 TDI 4x4 06/2007-11/2010

2.0 TDI 10/2006-11/2010

2.0 TDI 4x4 06/2007-06/2013

1.9 TDI 4x4 06/2009-12/2010

LEON (1M1)

1.9 TDI 11/1999-06/2006

1.9 TDI 11/1999-06/2006

1.9 TDI 10/2005-06/2006