SINTLY

SINTLY | STARTER MOTOR **XTLSTR1020**

VOLTAGE **24** V

POWER **4.00** kW

APPLICATIONS MAN

DIMENSIONS

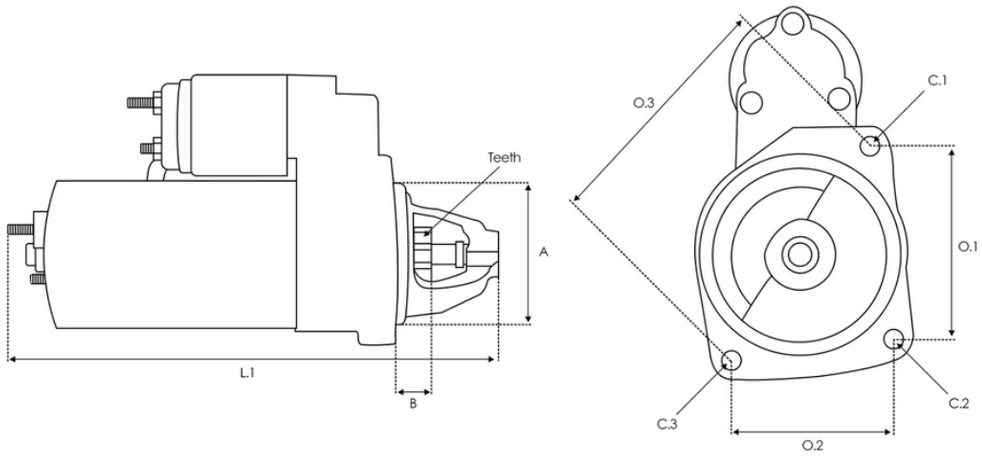

A **89.00 mm** B **28.00 mm** Teeth **11 qty.** L.1 **341.00 mm** O.1 **94.50 mm** O.2 **127.50 mm** O.3 **81.50 mm** C.1 **10.50 mm** C.2 **10.50 mm** C.3 **10.50 mm**

OE 编号

Other	0001368056

替代编码

3EFFE	PRSS062 STRS062
AINDE	CGB-23720 CGB-98305R

ANDEL	ANM15940X
AS-PL	S0040 UD03447S
AUTO MAGNETO	AM-2956
AUTOELECTRO	AES7165
BOSCH	0001368305 0001368310 0001368317 0986013720 0986017870 B001816592
CARGO	113468 F032113468
CASCO	CST10703AS CST10703ES
CEVAM	8637
DAF	1516780R
DELCO	19024286 DRS3720 DRS7870
EAI	33899
ELECTROLOG	STR1379 STR7910
ELSTOCK	45-1154 45-2308
ERA	220300
FENDT	F926900060130

FRIESEN	8813720
HC PARTS	CS595
HELLA	8EA726219-001
ISKRA / LETRIKA	11.130.626 11.131.085 11.131.144 AZJ3199 AZJ3374 AZJ3388 IS0626
KUHNER	10595
LAUBER	28.0595 28.0595M
LUCAS	LRS00765 LRS765
MAHLE	72735984 MS356
MAN	51.26201-9118 51262017085 51262017118 51262017143 51262017152 51262017162 51262017167 51262017189 51262017216 51262017217 51262019143
MONARK	81388310
POWER TRUCK	PTC-4028
PRESTOLITE	860818
REAL	20401307BN 20401307EL
SANDO	6010703.0 6010703.3
SIOM	MAV127030

STARDAX	STX210206 STX210206R
VALEO	455622 458343
WAI	30104N 551.004.113.010 551.004.113.016 551.004.113.018 551.004.113.098 551.004.113.311 551.004.113.608 551.004.113.770 S133.199 S145.181
WOODAUTO	STR22084

适用车型

MAN

M90

17.192 FAK 02/1989-06/1990

14.192 FK 08/1988-06/1990

17.192 FK 08/1988-06/1990

17.192 FS,17.192 FLS 08/1988-06/1990

17.192 F,17.192 FL 08/1988-06/1990

14.192 FS,14.192 FLS 08/1988-06/1990

17.192 FA 02/1989-06/1990

14.192 FA 08/1988-06/1990

14.192 F,14.192 FL 08/1988-06/1990

12.152 F,12.152 FL 12/1988-05/1994

12.152 F,12.152 FL 12/1988-05/1994

12.152 FK 12/1988-05/1994

12.152 FK 12/1988-05/1994

12.152 FS,12.152 FLS 12/1988-05/1994

12.152 FS,12.152 FLS 12/1988-05/1994

24.192 FNL,24.192 FNLL,24.192 FVL 07/1989-06/1996

12.192 FK 07/1990-06/1996

17.232 F,17.232 FL 08/1988-04/1995

18.192 F,18.192 FL,18.192 FLL 09/1990-06/1996 17.192 FA 07/1990-06/1996

24.192 FNL,24.192 FNLL,24.192 FVL 07/1989-06/1996

12.192 FA 10/1992-06/1996 18.262 FK 08/1995-06/1996

14.152 F,14.152 FL 05/1994-06/1996 14.192 F,14.192 FL 07/1990-06/1996

14.152 FS,14.152 FLS 12/1988-05/1994

14.192 FS,14.192 FLS 07/1990-06/1996 17.232 FA 02/1989-06/1996

17.192 FK 07/1990-01/1991

24.232 FNL,24.232 FNLL,24.232 FVL 07/1989-06/1996

17.232 FS,17.232 FLS 08/1988-04/1995 12.232 FK 08/1988-06/1996

14.152 FK 05/1994-06/1996 18.192 F,18.192 FL,18.192 FLL 09/1990-06/1996

12.222 FAK 05/1994-06/1996 14.192 FS,14.192 FLS 07/1990-06/1996

14.222 F,14.222 FL 05/1994-06/1996 14.162 F,14.162 FL 08/1995-06/1996

12.232 FA 05/1990-06/1996 12.232 F,12.232 FL 08/1988-06/1996

17.192 FA 07/1990-06/1996 12.232 FK 08/1988-06/1996

17.232 FAK 02/1989-06/1996 17.232 FA 02/1989-06/1996

14.232 F,14.232 FL 08/1988-06/1996 18.272 FK 10/1992-06/1996

17.232 F,17.232 FL 08/1988-04/1995 12.192 FK 07/1990-06/1996

14.152 F,14.152 FL 12/1988-04/1994 14.192 FK 07/1990-06/1996

12.192 F,12.192 FL 07/1990-06/1996 14.192 FK 07/1990-06/1996

12.222 FK 05/1994-06/1996 14.152 FS,14.152 FLS 12/1988-05/1994

12.232 FA 05/1990-06/1996 12.232 FK 08/1988-06/1996

14.232 FK 08/1988-06/1996

24.232 FNL,24.232 FNLL,24.232 FVL 07/1989-06/1996

14.262 FS,14.262 FLS 08/1995-06/1996

18.272 F,18.272 FL,18.272 FLL 10/1992-06/1996

12.192 F,12.192 FL 07/1990-06/1996 18.192 FK 09/1990-06/1996

14.272 FS,14.272 FLS 12/1992-06/1996 12.272 F,12.272 FL 10/1992-06/1996

17.232 FA 05/1990-04/1995 17.192 FAK 07/1990-06/1996

17.232 FAK 05/1990-04/1995 14.192 FK 07/1990-06/1996

17.232 FS,17.232 FLS 08/1988-04/1995 14.232 F,14.232 FL 05/1990-04/1995

17.192 FAK 07/1990-06/1996 17.232 FAK 02/1989-06/1996

24.192 FNL,24.192 FNLL,24.192 FVL 07/1989-06/1996

17.232 FK 08/1988-01/1991 12.232 FA 05/1990-06/1996

12.262 FS,12.262 FLS 08/1995-06/1996 12.272 FK 10/1992-06/1996

24.232 FNL,24.232 FNLL,24.232 FVL 07/1989-06/1996

12.192 FS,12.192 FLS 07/1990-06/1996

18.262 F,18.262 FL,18.262 FLL 08/1995-06/1996

17.232 F,17.232 FL 05/1990-04/1995 18.222 FK 05/1994-06/1996

18.192 FK 09/1990-06/1996 14.152 FK 12/1988-05/1994

17.192 FA 07/1990-06/1996 12.232 F,12.232 FL 08/1988-06/1996

14.192 F,14.192 FL 07/1990-06/1996 17.272 FLS 10/1992-05/1995

14.232 FS,14.232 FLS 08/1988-06/1996 12.192 FK 07/1990-06/1996

12.232 FS,12.232 FLS 08/1988-06/1996 18.232 FK 09/1990-06/1996

14.152 FS,14.152 FLS 05/1994-06/1996 12.192 FAK 10/1992-06/1996

14.232 F,14.232 FL 08/1988-06/1996 18.232 FK 09/1990-06/1996

12.192 F,12.192 FL 07/1990-06/1996 17.192 FS,17.192 FLS 07/1990-04/1995

12.272 FS,12.272 FLS 10/1992-06/1996 12.192 FAK 10/1992-06/1996

14.222 FLS 05/1994-06/1996 17.232 FS,17.232 FLS 05/1990-04/1995

14.152 F,14.152 FL 12/1988-04/1994 17.232 FA 02/1989-06/1996

14.272 FK 10/1992-06/1996 17.222 FAK 05/1994-06/1996

14.162 FK 08/1995-06/1996 14.232 F,14.232 FL 08/1988-06/1996

12.192 FS,12.192 FLS 07/1990-06/1996 14.262 FK 08/1995-06/1996

24.272 FNL,24.272 FNLL,24.272 FVL 10/1992-06/1996

12.192 FS,12.192 FLS 07/1990-06/1996 17.192 FAK 07/1990-06/1996

12.232 FS,12.232 FLS 08/1988-06/1996 17.232 FAK 02/1989-06/1996

12.222 F,12.222 FL 05/1994-06/1996 14.232 FS,14.232 FLS 08/1988-06/1996

18.232 F,18.232 FL,18.232 FLL 09/1990-06/1996

14.272 F,14.272 FL 10/1992-06/1996 12.192 FA 10/1992-06/1996

17.192 F,17.192 FL 07/1990-04/1995 12.232 FAK 05/1990-06/1996

14.232 FK 08/1988-06/1996 14.152 FK 12/1988-05/1994

18.232 F,18.232 FL,18.232 FLL 09/1990-06/1996 12.222 FLS 05/1994-06/1996

24.232 FNL 05/1990-04/1995

24.262 FNL,24.262 FNLL,24.262 FVL 08/1995-06/1996

18.192 F,18.192 FL,18.192 FLL 09/1990-06/1996

14.162 FS,14.162 FLS 08/1995-06/1996

17.192 FS,17.192 FLS 07/1990-04/1995 18.192 FK 09/1990-06/1996

12.232 FAK 05/1990-06/1996 18.232 FK 09/1990-06/1996

14.232 FK 08/1988-06/1996 14.192 F,14.192 FL 07/1990-06/1996

12.262 F,12.262 FL 08/1995-06/1996 14.232 FS,14.232 FLS 08/1988-06/1996

12.232 F,12.232 FL 08/1988-06/1996

14.192 FS,14.192 FLS 07/1990-06/1996

17.222 FA 05/1994-06/1996

14.232 FS,14.232 FLS 05/1990-04/1995

12.232 FS,12.232 FLS 08/1988-06/1996

18.222 F,18.222 FL,18.222 FLL 05/1994-06/1996

12.232 FAK 05/1990-06/1996

24.222 FNL,24.222 FNLL,24.222 FVL 05/1994-06/1996

17.192 F,17.192 FL 07/1990-04/1995

17.232 FK 05/1990-01/1991

12.222 FA 05/1994-06/1996

14.262 F,14.262 FL 08/1995-06/1996

18.232 F,18.232 FL,18.232 FLL 09/1990-06/1996

14.222 FK 05/1994-06/1996

G

6.90 F 10/1979-09/1987

9.136 FK 10/1979-08/1988

6.90 FK 10/1979-09/1987

8.136 FAE 12/1983-08/1988

8.90 FK 10/1979-09/1987

8.136 FK 10/1979-08/1988

9.136 F,9.136 FL 10/1979-09/1987

9.136 FAE 12/1983-08/1988

8.90 F 10/1979-09/1987

8.136 FOC 03/1982-07/1988

9.136 FOC 03/1982-07/1988

8.136 F,8.136 FL 10/1979-09/1987

L2000

10.185 LAEK, LAEK-L, LAERK, LAERK-L, LAK, LAK-L, LARK 09/2000

9.145 LK, L-KI, LRK, LR-KI, LRK-L, LK-L (LE140C) 09/2000

8.145 LK, LRK, L-KI, LRK-L, LK-L, LR-KILK (LE140C) 09/2000

8.185 LAC, LAEC, LARC, LAERC, LA-LF, LAE-LF (LE180C) 09/2000

9.185 LLS, LLRS (LE 180C) 09/2000

10.145 LLS, LLRS (LE140C) 09/2000

8.185 LC, LLC, LRC, LLRC (LE180C) 09/2000

9.145 LLS, LLRS (LE140C) 09/2000

10.185 LAC, LAEC, LARC, LAERC, LA-LA (LE180C) 09/2000

10.145 LK, L-KI, LRK, LR-KI, LRK-L, LK-L (LE140C) 09/2000

9.185 LK, L-KI, LRK, LR-KI, LRK-L, LK-L (LE180C) 09/2000

8.185 LAEK, LAEK-L, LAERK, LAERK-L, LAK, LAK-L, LARK, LARK-L 09/2000

9.185 LC,9.185 LLC, LRC, LLRC (LE180C) 09/2000

10.185 LLS, LLRS (LE180C) 09/2000

8.185 LK, L-KI, LRK, LR-KI LRK-L, LK-L(LE180C) 09/2000

10.185 LC,10.185 LLC, LRC, LLRC (LE180C) 09/2000

9.145 LC,9.145 LLC, LRC, LLRC (LE140C) 09/2000

8.185 LLS, LLRS (LE180C) 09/2000

8.145 LC, LLC, LLRC, LRC (LE140C) 09/2000

8.145 LLS, LLRS (LE140C) 09/2000

10.185 LK, L-KI, LRK, LR-KI, LRK-L, LK-L (LE180C) 09/2000

10.145 LC,10.145 LLC, LRC, LLRC (LE140C) 09/2000

10.185 LAE-GT, LAE-LF 09/2000 8.145 L-LF 09/2000

8.185 LA-LF, LAE-LF 09/2000 10.174 06/2000-01/2004

9.174 06/2000-01/2004 7.145 06/2000-01/2004 9.153 07/1999-08/2006

7.153 06/2000-01/2004 7.174 07/1999-08/2006 7.185 06/2000-01/2004

6.145 06/2000-01/2004 8.153 07/1999-08/2006 6.185 06/2000-01/2004

8.174 06/2000-01/2004 8.153 07/1999-04/2006 6.174 07/1999-08/2006

6.153 07/1999-08/2006 7.174 06/2000-01/2004 7.153 07/1999-08/2006

10.153 07/1999-04/2006 8.155 07/1999-04/2006 6.143 07/1999-08/2006

7.143 07/1999-08/2006 10.155 07/1999-04/2006 8.145 07/1999-02/2002

8.155 07/1999-08/2006 9.155 07/1999-08/2006

10.223 LAEC 01/1995-06/1996 9.153 LLS 10/1993-12/1995

10.163 LAC, LAEC, LARC, LAERC 05/1994

10.153 LC,10.153 LLC 10/1993-06/1996 8.163 LC,8.163 LLC 05/1994

9.163 LLS, LLRS 05/1994 8.223 LC,8.223 LLC 10/1993-06/1996

9.224 LK, L-KI, LRK, LR-KI, LRK-L, LK-L 05/1994 9.163 LLS, LLRS 05/1994

8.224 LK, LRK, L-KI, LR-KI 05/1994 9.153 LLS 10/1993-12/1995

8.113 LC, 8.113 LLC 08/1995 8.163 LK, L-KI, LRK, LR-KI, LRK-L, LK-L 05/1994

9.223 LK 10/1993-06/1996 10.163 LC,10.163 LLC 05/1994

8.220 FOC,8.220 FOCL 04/1995 8.103 LC, 8.103 LLC 10/1993-06/1996

10.224 LAC, LAEC, LARC, LAERC 01/1995

9.153 LC,9.153 LLC 10/1993-06/1996 9.153 LK 10/1993-06/1996

8.223 LK 10/1993-06/1996 8.150 FOC,8.150 FOCL 02/1995

10.150 FOC 02/1995-01/1996 9.223 LC,9.223 LLC 10/1993-06/1996

8.224 LAK, LAEK, LARK, LAERK 01/1995

10.163 LK, L-KI, LRK, LR-KI, LRK-L, LK-L 05/1994 9.223 LK 10/1993-06/1996

10.153 LK 10/1993-06/1996 10.163 LLS, LLRS 05/1994

8.223 LK 10/1993-06/1996 9.163 LK, L-KI, LRK, LR-KI, LRK-L, LK-L 05/1994

8.153 LC,8.153 LLC 10/1993-07/1997 9.153 LC,9.153 LLC 10/1993-06/1996

9.163 LC,9.163 LLC, LRC, LLRC 05/1994

10.224 LAC, LAEC, LARC, LAERC 01/1995 10.163 LC,10.163 LLC 05/1994

10.163 LAC, LAEC, LARC, LAERC 05/1994

8.223 LC,8.223 LLC 10/1993-06/1996 10.224 LLS, LLRS 05/1994

8.163 LK, L-KI, LRK, LR-KI, LRK-L, LK-L 05/1994 10.163 LLS, LLRS 05/1994

10.163 LK, L-KI, LRK, LR-KI, LRK-L, LK-L 05/1994

10.163 LC,10.163 LLC 05/1994 10.223 LK 10/1993-06/1996

8.113 LK, L-KI, LRK, LR-KI, LRK-L, LK-L 08/1995 8.163 LLS, LLRS 05/1994

8.224 LC,8.224 LLC, LRC, LLRC 05/1994 9.223 LC,9.223 LLC 10/1993-06/1996

8.153 LLS 10/1993-06/1996

10.163 LAEK, LAEK-L, LAERK, LAERK-L, LAK, LAK-L, LARK 01/1995

8.163 LK, L-KI, LRK, LR-KI, LRK-L, LK-L 05/1994 10.223 LK 10/1993-06/1996

9.224 LC,9.224 LLC, LRC, LLRC 05/1994

10.153 LC,10.153 LLC 10/1993-06/1996 8.163 LLS, LLRS 05/1994

10.224 LK, L-KI, LRK, LR-KI, LRK-L, LK-L 05/1994

8.163 LAC, LAEC, LARC, LAERC, LA-LF, LAE-LF 01/1995

9.163 LC,9.163 LLC, LRC, LLRC 05/1994 8.223 LLS 10/1993-06/1996

10.223 LLS 10/1993-06/1996 10.223 LC,10.223 LLC 10/1993-06/1996

9.223 LLS 10/1993-06/1996 10.223 LLS 10/1993-06/1996

8.163 LLS, LLRS 05/1994 10.163 LK, L-KI, LRK, LR-KI, LRK-L, LK-L 05/1994

9.163 LK, L-KI, LRK, LR-KI, LRK-L, LK-L 05/1994

8.163 LAC, LAEC, LARC, LAERC, LA-LF, LAE-LF 01/1995

9.223 LLS 10/1993-06/1996 9.224 LLS, LLRS 05/1994

10.223 LC,10.223 LLC 10/1993-06/1996

10.224 LAEK, LAEK-L, LAERK, LAERK-L, LAK, LAK-L, LARK 01/1995

8.224 LAC, LAEC, LARC, LAERC 01/1995 8.224 LLS, LLRS 05/1994

10.163 LAEK, LAEK-L, LAERK, LAERK-L, LAK, LAK-L, LARK 01/1995

8.163 LAC, LAEC, LARC, LAERC, LA-LF, LAE-LF 01/1995

10.224 LC,10.224 LLC, LRC, LLRC 05/1994

8.153 LC,8.153 LLC 10/1993-07/1997

10.224 LC,10.224 LLC, LRC, LLRC 05/1994 9.153 LK 10/1993-06/1996

9.163 LC,9.163 LLC, LRC, LLRC 05/1994 8.153 LLS 10/1993-06/1996

8.223 LLS 10/1993-06/1996 10.220 FOC,10.220 FOCL 02/1995

9.163 LLS, LLRS 05/1994 8.163 LC,8.163 LLC 05/1994

9.163 LK, L-KI, LRK, LR-KI, LRK-L, LK-L 05/1994

10.163 LAEK, LAEK-L, LAERK, LAERK-L, LAK, LAK-L, LARK 01/1995

10.163 LLS, LLRS 05/1994 8.163 LC,8.163 LLC 05/1994

10.163 LAC, LAEC, LARC, LAERC 05/1994 10.153 LK 10/1993-06/1996

8.153 LK 10/1993-07/1997 8.153 LK 10/1993-07/1997

8.225 LC,8.225 LLC, LRC, LLRC (LE220C) 09/2000

9.225 LK, L-KI, LRK, LR-KI, LRK-KI, LK-L (LE220C) 09/2000

8.225 LAEK, LAEK-L, LAERK, LAERK-L, LAK, LAK-L, LARK, LARK-L 09/2000

10.163 LC,10.163 LLC, LRC, LLRC (LE160C) 09/2000

8.225 LC,8.225 LLC, LRC, LLRC (LE220C) 09/2000

10.225 LK, L-KI, LRK, LR-KI, LRK-L, LK-L (LE220C) 09/2000

10.225 LAEK, LAEK-L, LAERK, LAERK-L, LAK, LAK-L, LARK 09/2000

10.225 LC, 10.225 LLC, LRC, LLRC (LE220C) 09/2000

10.225 LLS, LLRS (LE220C) 09/2000

9.225 LC,9.225 LLC, LRC, LLRC (LE220C) 09/2000

10.225 LAC, LAEC, LARC, LAERC (LE220C) 09/2000

9.225 LLS, LLRS (LE220C) 09/2000

8.225 LK, L-KI, LRK, LR-KI, LRK-L, LK-L (LE220C) 09/2000

8.225 LAC, LAEC, LARC, LAERC (LE220C) 09/2000

8.163 LC, LLC, LLRC, LRC (LE160C) 09/2000

8.225 LLS, LLRS (LE220C) 09/2000 8.163 LAK, LARK, LAEK, LAERK 04/2000

10.153 FA 06/1994-02/2007 10.224 FA 06/1994-04/2002

10.153 FA 06/1994-02/2007 10.153 F 06/1993-04/2006

10.153 F 06/1993-04/2006 10.223 FA 06/1994-04/2002

10.224 F, 10.224 FL 06/1993-04/2002

10.225 LC, 10.225 LLC, LRC, LLRC 09/2000

10.223 F, 10.223 FL 06/1993-04/2002 8.163 LA-LF, LAE-LF 01/1995

8.145 LA-LF, LAE-LF 07/2000 8.155 LK, L-KI, LR-KI, LRK-L, LK-L 02/2004

10.155 LC, LLC, LLRC, LRC, LLRC 09/2000

8.163 LAC, LAEC, LARC, LAERC 01/1995

8.155 LK, L-KI, LR-KI, LRK-L, LK-L 02/2004 8.155 L-LF 02/2004

8.155 LK, L-KI, LR-KI, LRK-L, LK-L 02/2004 8.155 LC, LLC, LRC, LLRC 02/2004

8.163 L-LF 05/1994

8.224 LAEK, LAEK-L, LAERK, LAERK-L, LAK, LAK-L, LARK, LARK-L 01/1995

10.155 LC, LLC, LLRC, LRC, LLRC 09/2000 8.155 LC, LLC, LRC, LLRC 02/2004

8.185 L-LF 09/2000 8.155 LC, LLC, LRC, LLRC 02/2004

8.155 LC, LLC, LRC, LLRC 02/2004 10.155 LC, LLC, LLRC, LRC, LLRC 09/2000

8.163 L-LF 05/1994 8.155 LLS, LLRS 02/2004 8.163 L-LF 05/1994

8.155 LLS, LLRS 02/2004 8.163 LAC, LAEC, LARC, LAERC 01/1995

8.163 LA-LF, LAE-LF 01/1995 8.155 LLS, LLRS 02/2004

8.224 LC, LLC, LRC, LLRC 05/1994 8.163 LA-LF, LAE-LF 01/1995

8.163 LAEK, LAEK-L, LAERK, LAERK-L, LAK, LAK-L, LARK, LARK-L 04/2000

8.163 LAC, LAEC, LARC, LAERC 01/1995 8.103 LK 10/1993-06/1996

9.163 LK 08/1995-03/1997

M 2000 L

18.284, 18.285, L-KO, LR-KO 06/1998 14.185 LC, LLC, LRC, LLRC 05/2001

15.185 LK, LRK, LK-L 11/2002 14.185 LK, LRK 05/2001

12.185 LC, LLC, LRC, LLRC 05/2001

15.185 LC, LLC, LLLC, LLLRC, LLRC, LRC 05/2001 12.185 LK, LRK 05/2001

13.185 07/1999-08/2001 15.255 LK, LRK, LK-L, (LE250B) 09/1999

14.284, 14.285, LAC, LARC 06/1998 18.285 LAC, LARC (LE280B) 09/1999

15.255 LC, LLC, LLLC, LRC, LLRC, LLLRC, (LE250B) 09/1999

18.284 LC, LLC, LLLC, LRC, LLRC, LLLRC 06/1998

18.284 LAK, LARK, LAK-L 06/1998

15.285 LC, LLC, LLLC, LRC, LLRC, LLLRC, (LE280B) 09/1999

14.284, 14.285, LAK, LARK, LAK-L 06/1998

14.285 LC, LLC, LLLC, LRC, LLRC, LLLRC,(LE280B) 09/2000

18.284, 18.285, LK, LK-L, LLK, LLK-L,LLRK, LRK 06/1998

18.285 LAK, LARK, LAK-L, (LE280B) 09/1999

15.284 LC, LLC, LLLC, LRC, LLRC, LLLRC 06/1998

18.285 LC, LLC, LLLC, LRC, LLRC, LLLRC, (LE280B) 09/1999

15.284 LK, LRK, LK-L 06/1998

14.284, 14.285, LK, LRK 10/1998

14.284, 14.285, LA-LF 06/1998

14.284 LC, LLC, LLLC, LRC, LLRC, LLLRC 10/1998

15.285 LK, LRK, LK-L, (LE280B) 09/1999

18.255 LC, LLC, LLLC, LRC, LLRC, LLLRC, (LE250B) 09/1999

18.284 LAC, LARC 06/1998

14.255 LC, LLC, LLLC, LRC, LLRC, LLLRC (LE250B) 09/2000

26.284, 26.285, DL-HK, DLR-HK 11/2002

19.284, 19.285, LC, LLC, LLLC, LLLRC, LLRC, LRC 05/2001

14.255 LAC, LARC 11/2002

26.284, 26.285, DL-HK, DLR-HK 11/2002

18.255 LAC, LARC 05/2001

20.284, 20.285, LNLC, LNLLC 05/2001

20.284, 20.285, LNLC, LNLLC 05/2001

26.284 DL-TM, DLR-TM 05/2001

26.284 DL-TM, DLR-TM 05/2001

26.285 DL-TM, DLR-TM 05/2001

12.145 LC, LLC, LRC, LLRC 05/2001

12.145 LK, LRK 05/2001

18.224, 18.225, LAC, LARC 08/1995

14.263, 14.264 LAK, LARK, LAK-L 08/1995

18.224, 18.225, LAC, LARC 08/1995

14.224 LK, LRK 08/1995

18.224, 18.225, LAK, LARK, LAK-L 08/1995

15.224 LC, LLC, LLLC, LRC, LLRC, LLLRC 08/1995

18.224, 18.225, LAK, LARK, LAK-L 08/1995

18.224, 18.225, LC, LLC, LLLC, LRC, LLRC, LLLRC 08/1995

18.263, 18.264, LAK, LARK, LAK-L 08/1995

12.163 LC, LLC, LRC, LLRC 08/1995

18.224, 18.225, LC, LLC, LLLC, LRC, LLRC, LLLRC 08/1995

14.224 LAC, LARC 08/1995 14.263, 14.264 LK, LRK 08/1995

14.224 LAK, LARK, LAK-L 08/1995

14.224 LC, LLC, LLLC, LRC, LLRC, LLLRC 08/1995

18.224, 18.225, LK, LK-L, LLK, LLK-L, LLRK, LRK 08/1995

15.163 LC, LLC, LLLC, LLLRC, LLRC, LRC 08/1995

15.224 LK, LRK, LK-L 08/1995

14.263, 14.264 LC, LLC, LLLC, LRC, LLRC, LLLRC 08/1995

14.224 LAK, LARK, LAK-L 08/1995

18.263, 18.264, LK, LK-L, LLK, LLK-L,LLRK, LRK 08/1995

15.263, 15.264 LC, LLC, LLLC, LRC,LLRC, LLLRC 08/1995

12.224, 12.225, LK, LRK 08/1995

15.163 LC, LLC, LLLC, LLLRC, LLRC, LRC 08/1995

14.263, 14.264 LAC, LARC 08/1995

18.224, 18.225, LC, LLC, LLLC, LRC, LLRC, LLLRC 08/1995

14.163 LC, LLC, LRC, LLRC 08/1995 12.163 LC, LLC, LRC, LLRC 08/1995

18.263, 18.264, LAC, LARC 08/1995 14.163 LC, LLC, LRC, LLRC 08/1995

14.224 LAC, LARC 08/1995 14.224 LK, LRK 08/1995

12.224 LC, LLC, LRC, LLRC 08/1995

18.263, 18.264, LC, LLC, LLLC, LRC, LLRC, LLLRC 08/1995

18.224, 18.225, LK, LK-L, LLK, LLK-L, LLRK, LRK 08/1995

15.224 LC, LLC, LLLC, LRC, LLRC, LLLRC 08/1995

15.263, 15.264 LK, LRK, LK-L 08/1995 12.224 LC, LLC, LRC, LLRC 08/1995

15.224 LK, LRK, LK-L 08/1995

18.224, 18.225, LAC, LARC 08/1995

12.224, 12.225, LK, LRK 08/1995

14.224 LC, LLC, LLLC, LRC, LLRC, LLLRC 08/1995

14.225 LAC, LARC, (LE220B) 09/2000

14.225 LC, LLC, LLLC, LRC, LLRC, LLLRC (LE220B) 09/2000

15.225 LC, LLC, LLLC, LRC, LLRC, LLLRC, (LE220B) 09/1999

15.225 LK, LRK, LK-L, (LE220B) 09/1999

14.225 LK, LRK (LE220B) 09/2000

14.225 LAK, LARK, LAK-L, (LE220B) 09/2000

20.224 LNLC, LNLLC 05/2001

20.224 LNLC, LNLLC 05/2001

20.224 LNLC, LNLLC 05/2001

12.225 LC, LLC, LLLC, LRC, LLRC 05/2001

20.224 LNLC, LNLLC 05/2001

20.224 LNLC, LNLLC 05/2001

20.224, 20225 LNLC, LNLLC 05/2001

20.224, 20225 LNLC, LNLLC 05/2001

20.224, 20225 LNLC, LNLLC 05/2001

20.224, 20225 LNLC, LNLLC 05/2001

20.224, 20225 LNLC, LNLLC 05/2001

20.224, 20225 LNLC, LNLLC 05/2001

M 2000 M

14.284 MAK, MAK-L, MARK 06/1998-12/2005

14.284 MA-KO, MA-LF 06/1998-12/2005

18.284 MAK, MAK-L, MARK 06/1998-12/2005

18.284 MK, MK-L, MLK, MLRK, MRK 06/1998-12/2005

18.284 MLS, MLRS 06/1998-12/2005

18.284 MC, MLC, MLLC, MLRC, MRC, MLLRC 06/1998-12/2005

14.284 MC, MLC, MLLC, MLRC, MRC, MLLRC 06/1998-12/2005

18.284 MAC, MARC 06/1998-12/2005

14.284 MLS, MLRS 06/1998-12/2005

25.285 MNLC, MNLLC, MNLRC, MNLLRC, MVLC 02/2003-12/2005

25.285 MNLC, MNLLC, MNLRC, MNLLRC, MVLC 02/2003-12/2005

14.285 MC, MLC, MLLC, MLRC, MRC, MLLRC (ME280C) 09/1999-12/2005

18.285 MC, MLC, MLLC, MLRC, MRC, MLLRC 06/1998-12/2005

18.285 MAC, MARC 02/2003-12/2005 18.285 MLS, MLRS 02/2003-12/2005

14.285 MLS, MLRS 02/2003-12/2005

18.285 MK, MK-L, MLK, MLRK, MRK 02/2003-12/2005

18.285 M-KO, MR-KO 02/2003-12/2005

18.285 MK, MK-L, MLK, MLRK, MRK 02/2003-12/2005

14.285 MAK, MAK-L, MARK 02/2003-12/2005

18.285 MAK, MAK-L, MARK 01/1996-07/2005

14.285 MAK, MAK-L, MARK 02/2003-12/2005

14.285 MA-KO, MA-LF 02/2003-12/2005

18.285 MAK, MAK-L, MARK 01/1996-07/2005

18.285 M-KO, MR-KO 02/2003-12/2005 14.285 MA-KO, MA-LF 02/2003-12/2005

14.225 MLS, MLRS 02/2003-12/2005

18.224 MAK, MAK-L, MARK 08/1995-12/2005

18.224 MAC, MARC 08/1995-12/2005

18.264 MAK, MAK-L, MARK 08/1995-12/2005

18.264 MC, MLC, MLLC, MRC, MLRC, MLLRC 08/1995-12/2005

14.224 MC, MLC, MLLC, MLRC, MRC, MLLRC 08/1995-12/2005

18.224 MC, MLC, MLLC, MRC, MLRC, MLLRC 08/1995-12/2005

18.224 MLS, MLRS 08/1995-12/2005

14.224 MC, MLC, MLLC, MLRC, MRC, MLLRC 08/1995-12/2005

18.224 MK, MK-L, MLK, MLRK, MRK 08/1995-12/2005

14.224 MC, MLC, MLLC, MLRC, MRC, MLLRC 08/1995-12/2005

14.224 MAK, MAK-L, MARK 08/1995-12/2005

18.264 MAC, MARC 08/1995-12/2005

14.224 MLS, MLRS 08/1995-12/2005

14.264 MLS, MLRS 08/1995-12/2005

18.224 MLS, MLRS 08/1995-12/2005

14.224 MK 08/1995-12/2005

18.264 MLS, MLRS 08/1995-12/2005

14.264 MC, MLC, MLLC, MLRC, MRC, MLLRC 08/1995-12/2005

25.264 MNLC, MNLLC, MNLRC, MNLLRC, MVLC 08/1995-12/2005

25.224 MNLC, MNLLC, MNLRC, MNLLRC, MVLC 08/1995-12/2005

18.224 MAC, MARC 08/1995-12/2005

25.224 MNLC, MNLLC, MNLRC, MNLLRC, MVLC 08/1995-12/2005

14.224 MAK, MAK-L, MARK 08/1995-12/2005

18.224 MK, MK-L, MLK, MLRK, MRK 08/1995-12/2005

14.224 MK 08/1995-12/2005

18.264 MK, MK-L, MLK, MLRK, MRK 08/1995-12/2005

18.224 MAK, MAK-L, MARK 08/1995-12/2005

25.224 MNLC, MNLLC, MNLRC, MNLLRC, MVLC 08/1995-12/2005

14.224 MLS, MLRS 08/1995-12/2005

18.224 MC, MLC, MLLC, MRC, MLRC, MLLRC 08/1995-12/2005

14.225 MAK, MAK-L, MARK 08/1995-07/2005

14.225 MAK, MAK-L, MARK 08/1995-07/2005

14.225 MAK, MAK-L, MARK 08/1995-07/2005

G90

8.100 F 09/1987-10/1993 8.100 FK 09/1987-10/1993

8.100 FK 09/1987-10/1993 8.150 F,8.150 FL 05/1990-10/1993

6.100 F 09/1987-10/1993 10.150 F,10.150 FL 05/1990-10/1993

6.100 FK 09/1987-10/1993 8.100 F 09/1987-10/1993

6.100 F 09/1987-10/1993 8.100 F 09/1987-10/1993

6.100 FK 09/1987-10/1993 6.100 F 09/1987-10/1993

9.150 F,9.150 FL 05/1990-10/1993 6.100 FK 09/1987-10/1993

8.100 FK 09/1987-10/1993 8.150 FAE 05/1988-05/1995

9.150 FK 09/1987-10/1993 10.150 F,10.150 FL 09/1987-10/1993

9.150 FAE 05/1988-05/1992 8.150 FS,8.150 FLS 09/1987-10/1993

9.150 FS,9.150 FLS 09/1987-10/1993 9.150 FS,9.150 FLS 09/1987-10/1993

8.150 FOC 07/1988-10/1993 9.150 FAE 05/1988-05/1992

8.150 FK 09/1987-10/1993 8.150 F,8.150 FL 09/1987-10/1993

8.150 FK 09/1987-10/1993 9.150 FOC 07/1988-10/1993

8.150 FOC 07/1988-10/1993 10.150 FK 09/1987-10/1993

10.150 F,10.150 FL 09/1987-10/1993 8.150 F,8.150 FL 09/1987-10/1993

9.150 F,9.150 FL 09/1987-10/1993 9.150 FOC 07/1988-10/1993

8.150 FAE 05/1988-05/1995 10.150 FK 09/1987-10/1993

8.150 FS,8.150 FLS 09/1987-10/1993 9.150 FK 09/1987-10/1993

9.150 F,9.150 FL 09/1987-10/1993 8.170 FOC 02/1989-10/1993

9.170 FOC 02/1989-10/1993

NL

NL 202, NL 262, NL 263 04/1991

NL 202, NL 222, NL 223 08/1992

NL 202, NL 222, NL 223 08/1992

NL 262, NL 263 07/1998

NL 202 09/1989-04/1994

HOCL

10.190 HOCL 08/1987-04/2004

11.150 HOCL 08/1987-04/2004

10.150 HOCL 08/1987-04/2004

14.220 HOCL/R-NL 01/1998

14.220 HOCL/R-NL 01/1998

10.150 HOCL 08/1987-04/2004

14.220 HOCL/R-NL 01/1998

11.150 HOCL 08/1987-04/2004

11.190 HOCL 08/1987-04/2004

SM

SM 152 11/1987-04/1994

SM 182,SM 192 11/1987-02/1995

EM

EM 222,EM 223 02/1996

EM 222,EM 223 02/1996

EM 192 10/1993-06/1997

NM

NM 222, NM 223 02/1996

NM 222, NM 223 02/1996

NM 223 08/1987

NM 152 05/1990-10/1993

NM 182, NM 192 05/1990-03/1997

NM 152 04/1992-03/1997

NG

NG 262, NG 272 08/1992-07/1998

NÜ

NÜ 263 09/1996-07/1998

NÜ 263 07/1998

NÜ 263 07/1998

EL

EL 262 07/1998-02/2001

EL 202,EL 222 01/1993-06/1997

EL 202,EL 222 01/1993-06/1997

EL 202,EL 262 04/1994-06/1997

EL 202,EL 222 01/1993-06/1997