SINTLY

SINTLY | STARTER MOTOR

XTLSTR3006

VOLTAGE 12 V

POWER 1.10 kW

APPLICATIONS MITSUBISHI, RENAULT, VOLVO

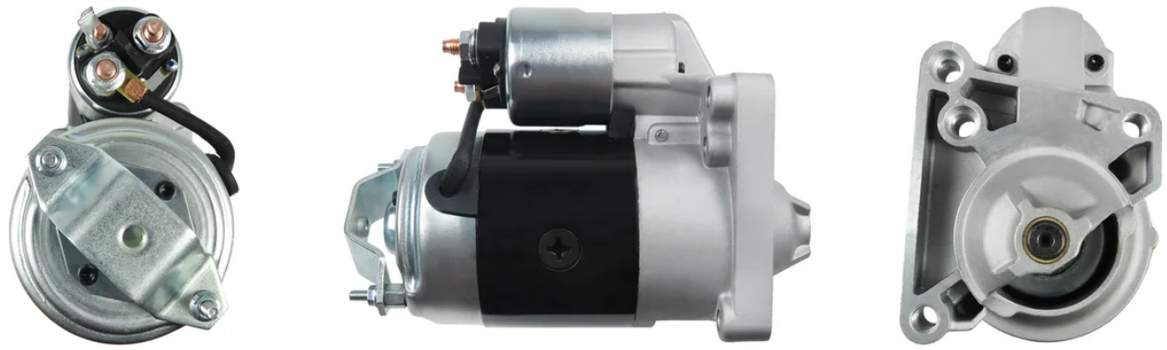

DIMENSIONS

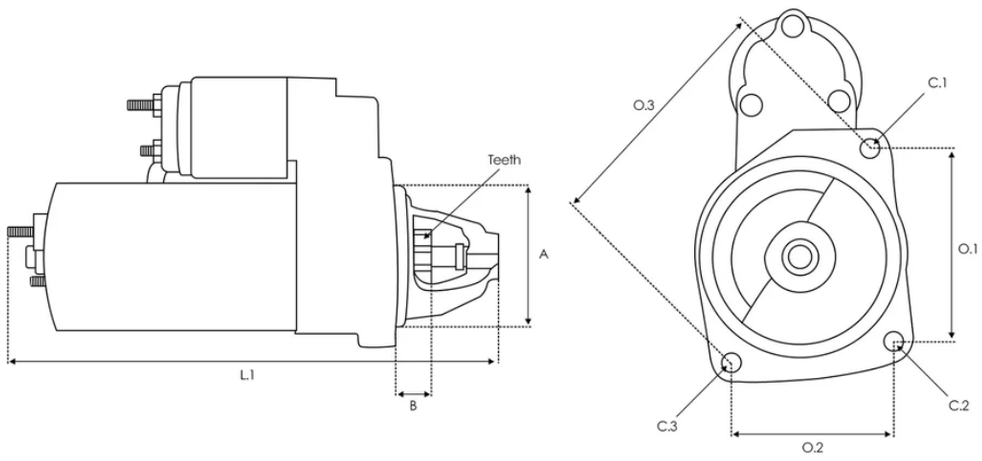

A 66.00 mm B -2.00 mm Teeth 9 qty L.1 212.50 mm O.1 104.00 mm O.2 93.00 mm O.3 23.00 mm C.1 M10x1.5 mm C.2 M10x1.5 mm C.3 M10x1.5 mm

OE 编号

RENAULT	0000431120

替代编码

3EFFE	PRSL002 STRL002
ANDEL	ANM12530X

AS-PL	S3015
AUTOELECTRO	AES5103 AES5105
BOSCH	0001208515 0001208517 0001208526 0001208528 0001208717 0986010310 0986010311 0986015010 0986015011 9000333117
CARGO	110585 F032110585
CASCO	CST10117AS
CEVAM	3010
DAF	1516729R
DELCO	DRS0310 DRS3116 DRS5010
DUCELLIER	534029 534031 534042 534043 534057
EAI	11348 11359
ELECTROLOG	STR00214 STR0031 STR00366 STR7831 STR79066
ERA	220150 220389 220456
FORD	ESA150
FRIESEN	8010310

GPARTS	GS432566-A
HC PARTS	CS310
HELLA	8EA726063-001
HERTH+BUSS	42013200 42015010 42016401
ISKRA / LETRIKA	11.130.208 11.130.346 11.130.582 11.130.956 AZF3512 AZF3531 AZF3558
KUHNER	10310
LAUBER	22.0310
LOGISTIK	330462
MAGNETI MARELLI	63291405
MITSUBISHI	M002T48361 M002T48381 M003T32985 M003T32986 M003T32988 M003T32989 M003T32991 M003T42581 M2T48361 M2T48381 M3T32985 M3T32986 M3T32988 M3T32989 M3T32991 M3T42581 N3T42581
PEUGEOT	580273 580276
POWERMAX	8212447
PRESTOLITE	20513048 35258720 66925129
REAL	20401711BN

RENAULT	0000434120 310404 310492 7700272482 7700352050 7700703490 7700715116 7700758217 7700854349 7700854954 7701349264 7701349265 7701351027 7701352048 7701352049 7701352350 7701499200 7701499247 7701499467 7701499482 7701499487 7702180318 7708758174 7709758174
RNL	RNL1031
SANDO	6010117 6015102.1
SIOM	MAV4510
SOVEREIGN	SS154 SS340
STARDAX	STX200079 STX200079R STX200155 STX200302 STX200302R STX200636 STX200705
STARLINE	SX 2100
VALEO	432566 432614 432621 433249 433309 436058 436059 436084 D9E137 D9E138 D9E237 D9E238 D9E276 D9E39 D9E71 D9E76 D9E761 D9E77 D9E771 D9E772 D9E773 D9E774 D9E776 D9R237 ND058 ND114 ND145 VS103 VS320
VOLVO	3412455 3430012 468532 9031082 9031302
WAI	16797R 30177N 570.003.094.000

	570.003.094.375 570.003.094.395 570.003.094.500 570.003.094.505 S133.617 S148.534
WOODAUTO	STR54000

适用车型

RENAULT

9 (L42_)

1.4 (L423, L42R) 09/1985-12/1988
1.1 (L421) 09/1981-05/1987
1.4 (L422, L42C) 12/1981-12/1988
1.4 (L422, L42C) 12/1981-12/1988
1.1 (L421) 09/1981-05/1987
1.4 (L423, L42R) 09/1985-12/1988
1.4 (L423, L42R) 09/1985-12/1988
1.4 (L422, L42C) 12/1981-12/1988
1.4 (L423) 09/1981-12/1985
1.4 (L422, L42C) 12/1981-12/1988
1.4 (L423) 09/1981-12/1985
1.4 Automatik (L423) 09/1981-12/1985
1.4 Automatik (L423) 09/1981-12/1985
1.4 (L423, L42R) 09/1985-12/1988
1.4 Turbo (L425) 04/1984-12/1986
1.4 Turbo (L425) 04/1984-12/1986
1.4 Turbo 12/1986-12/1989
1.4 07/1986-10/1987
1.4 Turbo 07/1986-12/1989
1.2 (L42S) 09/1985-12/1988
1.2 (L42S) 09/1985-12/1988
1.7 (L42N) 10/1986-12/1988
1.7 (L42N) 10/1986-12/1988
1.7 (L42E) 06/1987-12/1988
1.7 (L42N) 10/1986-12/1988
1.7 (L42L) 10/1986-12/1988
1.7 (L426) 09/1984-12/1989
1.7 (L426) 09/1984-12/1989

1.7 (L42F) 10/1986-12/1988 1.6 D (L424) 10/1982-12/1988

1.6 D (L424) 10/1982-12/1988 1.6 D (L424) 10/1982-12/1988

RAPID Box Body/MPV (F40_, G40_)

1.4 (F40M) 03/1986-08/1991 1.0 02/1986-05/1992 1.0 09/1985-08/1991

1.2 09/1991-08/1993 1.1 09/1985-08/1991 1.1 09/1993-04/1995

1.1 (F401) 07/1985-04/1995 1.1 (F401) 07/1985-04/1995

1.1 (F401) 07/1985-04/1995 1.1 (F401) 07/1985-04/1995

1.1 (F401) 07/1985-04/1995 1.2 (F406, G40A) 09/1991-03/1998

1.1 (F40H) 06/1987-09/1991 1.2 (F406, G40A) 09/1991-03/1998

1.1 (F401) 07/1985-04/1995 1.4 (F402) 07/1985-08/1991

1.4 (F402) 07/1985-08/1991 1.4 RN 09/1991-08/1993

1.4 Cat (F407) 08/1988-03/1998 1.4 Cat (F407) 08/1988-03/1998

1.4 Cat (F407) 08/1988-03/1998 1.4 Cat (F407) 08/1988-03/1998

1.4 (F40Y, F40A, F40V) 09/1991-08/1997

1.4 (F40Y, F40A, F40V) 09/1991-08/1997

1.4 (F40Y, F40A, F40V) 09/1991-08/1997 1.6 D (F404) 03/1986-08/1998

1.6 D (F404) 03/1986-08/1998 1.4 (F40U, F40V) 09/1991-03/1998

1.6 D (F404) 03/1986-08/1998 1.4 (F40U, F40V) 09/1991-03/1998

1.4 (F40D) 01/1994-03/1998 1.4 (F40U, F40V) 09/1991-03/1998

1.4 (F40U, F40V) 09/1991-03/1998 1.6 D (F404) 03/1986-08/1998

TRAFIC Bus (T_, P_, V_)

1.6 01/1984-06/1986 1.6 01/1984-06/1986 1.6 01/1984-06/1986

1.7 08/1992-08/1994 1.7 06/1986-04/1989 1.9 D 06/1997-03/2001

1.9 D 06/1997-03/2001

11 (B/C37_)

1.2 (B37S, C375) 10/1984-12/1988

1.4 (B/C373, B/C37R) 03/1983-12/1988

1.4 (B/C373) 05/1983-12/1985

1.2 (B37S, C375) 10/1984-12/1988

1.4 Turbo (B/C375) 04/1984-12/1986

1.4 Turbo (B/C375) 10/1986-12/1988

1.1 (B/C371) 03/1983-06/1986

1.4 Turbo (B/C375) 10/1986-12/1988

1.4 (B/C373) 03/1983-12/1985

1.4 (B/C373) 05/1983-12/1985

1.4 (B/C373, B/C37R) 03/1983-12/1988

1.4 (B/C372, B/C37C) 03/1983-12/1988

1.4 (B/C373, B/C37R) 03/1983-12/1988

1.4 (B/C372, B/C37C) 03/1983-12/1988

1.4 (B/C373) 03/1983-12/1985

1.4 Turbo (B/C375) 04/1984-12/1986

1.1 (B/C371) 03/1983-06/1986

1.4 (B/C373, B/C37R) 03/1983-12/1988

1.4 07/1986-10/1987

1.4 Turbo 02/1984-06/1986

1.7 (B37N, C73N) 10/1986-12/1988

1.7 (B37N, C73N) 10/1986-12/1988

1.7 (B/C376) 10/1983-12/1987

1.7 (B/C376) 10/1983-12/1987

1.7 (B/C37D) 06/1987-12/1988

1.7 (B/C37D) 06/1987-12/1988

1.7 (B/C37L) 10/1986-12/1988

1.7 (B37N, C73N) 10/1986-12/1988

1.7 (B/C37F) 10/1984-12/1988

1.7 (B/C37E) 06/1987-12/1988

1.6 D (B/C374) 08/1983-12/1988

1.6 D (B/C374) 08/1983-12/1988

1.6 D (B/C374) 08/1983-12/1988

SUPER 5 (B/C40_)

1.4 Turbo (C405) 04/1985-08/1990

1.4 Turbo (C405) 04/1985-08/1990

1.4 Turbo (C405) 04/1985-08/1990

1.4 Cat (B/C/407) 10/1985-12/1996

1.2 (B/C40F) 01/1987-08/1990

1.2 (B/C40F) 01/1987-08/1990

1.2 (B/C40F) 01/1987-08/1990 1.4 Cat (B/C/407) 10/1985-12/1996

1.4 Cat (B/C/407) 10/1985-12/1996 1.4 08/1986-12/1996

1.4 (B/C40J) 06/1987-07/1989 1.1 (B/C/401) 10/1984-10/1988

1.7 (B/C40K, B/C40G) 06/1987-03/1995

1.1 (B/C/401, B/C40H) 01/1986-03/1995 1.0 (B/C/400) 10/1984-10/1988

1.4 (B/C403) 10/1984-07/1989 1.4 (B/C403) 10/1984-07/1989

1.1 (B/C/401, B/C40H) 01/1986-03/1995 1.4 (B/C403) 10/1984-07/1989

1.7 (B/C40K, B/C40G) 06/1987-03/1995 1.4 (B/C402) 10/1984-06/1988

1.1 (B/C/401) 10/1984-10/1988 1.4 (B/C403) 10/1984-07/1989

1.1 (B/C/401, B/C40H) 01/1986-03/1995 1.4 (B/C403) 10/1984-07/1989

1.1 (B/C/401) 10/1984-10/1988 1.4 (B/C403) 10/1984-07/1989

1.4 (B/C40M) 06/1987-08/1990 1.4 (B/C402) 10/1984-06/1988

1.1 (B/C/401, B/C40H) 01/1986-03/1995 1.6 D (B/C/404) 08/1985-12/1996

1.6 D (B/C/404) 08/1985-12/1996 1.7 (B/C408) 10/1986-03/1995

1.7 (B/C408) 10/1986-03/1995

19 II (B/C53_)

1.4 (B/C532) 04/1992-12/1995 1.2 04/1992-12/1995

1.8 16V 10/1996-06/2001 1.4 10/1996-06/2001 1.4 01/1992-12/1995

1.4 01/1992-12/1995 1.8 16V (B/C53D) 04/1992-12/1995

1.8 (B/C53Y) 04/1992-12/1995 1.7 (B/C53B) 04/1992-12/1995

1.7 (B/C53B) 04/1992-12/1995 1.9 D (B/C53J) 04/1992-12/1995

1.8 (5/353F, B/C538) 05/1994-12/1995 1.4 (B/C535) 01/1992-12/1995

1.8 (B/C538) 04/1992-05/1994 1.8 (5/353F, B/C538) 05/1994-12/1995

1.8 (B/C53Y) 04/1992-12/1995 1.8 (5/353A) 04/1992-12/1995

1.8 (5/353A) 04/1992-12/1995 1.8 (B/C53Y) 04/1992-12/1995

1.8 (B/C53Y) 04/1992-12/1995

19 II Chamade (L53_)

1.4 (532) 04/1992-12/1995 1.4 05/1992-09/1994 1.4 05/1992-09/1994

1.4 05/1992-09/1994 1.4 10/1994-11/1995 1.8 16V (L53D) 04/1992-12/1995

1.7 (L533) 01/1993-08/1995 1.7 (L533) 01/1993-08/1995

1.8 (L538) 04/1992-05/1994 1.9 D (L53J) 04/1992-12/1997

1.8 (L53V, L538) 05/1994-12/1995 1.8 (L53Y) 04/1992-12/1995

1.9 dT (L53T) 04/1992-12/1995 1.8 (L53Y) 04/1992-12/1995

1.8 (L53Y) 04/1992-12/1995 1.4 (L535) 11/1993-12/1995

1.7 (L53B) 04/1992-12/1995 1.8 (453A/F) 04/1992-12/1995

1.8 (L53Y) 04/1992-12/1995 1.8 (L53Y) 04/1992-12/1995

1.8 (453A/F) 04/1992-12/1995 1.7 (L53B) 04/1992-12/1995

1.8 (L53Y) 04/1992-12/1995

19 I (B/C53_)

1.4 (B/C53P) 01/1989-05/1993 1.2 01/1988-12/1992

1.4 Cat (B/C532) 01/1989-04/1992 1.8 16V 06/1989-04/1992

1.7 07/1988-04/1992 1.7 07/1988-04/1992 1.7 09/1988-04/1992

1.4 01/1988-12/1992 1.4 01/1988-12/1992

1.8 16V (B/C53D) 06/1989-04/1992 1.7 (B/C53B) 09/1988-04/1992

1.7 (B/C53B) 09/1988-04/1992 1.7 (B/C53C) 09/1988-04/1992

1.7 (B/C53C) 09/1988-04/1992

11 Hatchback Van (S37_)

1.1 (S371) 03/1983-06/1986
1.4 (S373) 03/1983-12/1986
1.1 (S371) 03/1983-06/1986
1.4 (S372) 03/1983-09/1986
1.2 (S37S) 10/1984-12/1988
1.4 (S372) 03/1983-09/1986
1.2 (S37S) 10/1984-12/1988

19 II Hatchback Van (S53_)

1.2 03/1992-12/1995
1.4 03/1992-12/1995

CLIO I Hatchback Van (S57_)

1.1 01/1991-09/1998
1.2 06/1994-02/1998
1.2 01/1991-09/1998
1.2 01/1991-09/1998

CLIO I (B/C57_, 5/357_)

1.2 (B/C/S577) 01/1996-12/1996
1.1 04/1992-08/1992
1.8 (B/C57C, B/C57U) 01/1991-09/1998
1.8 (B/C57C, B/C57U) 01/1991-09/1998
1.8 Rsi (B/C579) 01/1993-08/1995
1.7 (B/C574) 01/1991-12/1993
1.1 01/1991-09/1998
1.2 (B/C/S57A, B/C57S, 5/357F, 5/357J, 5/357L, 5/357R) 05/1990-09/1998
1.2 (B/C/S57A, B/C57S, 5/357F, 5/357J, 5/357L, 5/357R) 05/1990-09/1998
1.2 (B/C/S57A, B/C57S, 5/357F, 5/357J, 5/357L, 5/357R) 05/1990-09/1998
1.2 (B/C/S572) 05/1990-03/1996
1.4 05/1990-02/1998
1.4 05/1990-02/1998
1.4 05/1990-02/1998
1.4 (B/C57T, B/C57Y) 01/1991-09/1998
1.8 Rsi (B/C57H) 08/1995-09/1998
1.4 (B/C57T, B/C57Y) 01/1991-09/1998
1.8 16V (C57D) 01/1991-03/1996
1.8 (B/C57C, C579, B/C57U) 08/1994-04/1996
1.8 (B/C57C, C579, B/C57U) 08/1994-04/1996

1.4 (B/C57T, B/C57Y) 01/1991-09/1998 1.4 (B/C57T, B/C57Y) 01/1991-09/1998

1.8 (B/C57C, C579, B/C57U) 08/1994-04/1996 1.4 01/1991-09/1998

1.4 01/1991-09/1998 1.4 (B57J, C57J, B57P) 01/1991-09/1998

1.4 (B57J, C57J, B57P) 01/1991-09/1998

1.4 (B57J, C57J, B57P) 01/1991-09/1998 Williams (B/C57M) 01/1994-09/1998

1.8 01/1991-09/1998 1.2 (B/C57R, B575, B57A) 01/1991-06/1996

1.2 (B/C57R, B575, B57A) 01/1991-06/1996

1.2 (B/C57R, B575, B57A) 01/1991-06/1996

1.2 (B/C57R, B575, B57A) 01/1991-06/1996

1.2 (B/C57R, B575, B57A) 01/1991-06/1996

19 I Hatchback Van (S53_)

1.2 01/1988-12/1992 1.4 01/1988-12/1992

19 I Chamade (L53_)

1.2 01/1988-12/1992 1.8 16V 06/1989-08/1990

1.4 (L532, L53P) 07/1988-04/1992 1.4 (L532, L53P) 07/1988-04/1992

1.4 06/1989-08/1990 1.7 09/1990-04/1992 1.8 16V (L53D) 10/1989-04/1992

1.7 (L533) 09/1988-12/1992 1.7 (L533) 09/1988-12/1992

1.7 (L53C) 07/1988-04/1992 1.7 (L53C) 07/1988-04/1992

1.7 (L53B) 10/1989-04/1992 1.7 (L53B) 10/1989-04/1992

21 Saloon (L48_)

1.4 (L48D) 06/1988-10/1993 1.7 (L48N) 06/1987-04/1989

1.7 (L481) 03/1986-12/1987 1.7 04/1986-06/1989 1.7 04/1986-06/1989

1.7 (L48M, L48F) 07/1986-02/1994 1.7 (L48E) 03/1986-02/1994

1.7 (L48E) 09/1989-02/1994 1.7 (L48M, L48F) 07/1986-02/1994

1.7 (L48E) 03/1986-02/1994 1.7 (L482) 03/1986-03/1993

1.7 (L48E) 09/1989-02/1994

21 (B48_)

1.4 (B48D) 09/1989-05/1993 1.7 07/1989-05/1993 1.7 07/1989-05/1993

1.7 (B48F) 09/1989-10/1992 1.7 (B48E) 09/1989-06/1994

1.7 (B48E) 09/1989-06/1994

SUPER 5 Hatchback Van (S40_)

1.4 09/1985-07/1986

EXPRESS Pickup

1.2 07/1995-10/1999

21 Estate (K48_)

1.7 (K48N) 06/1987-04/1989 1.7 (K48M) 06/1986-12/1989

1.7 (K48E) 10/1989-12/1993 1.7 (K/S482) 10/1986-12/1988

1.7 (K48E) 06/1986-12/1989 1.7 (K48E) 06/1986-12/1989

1.7 Cat (K48F) 05/1988-06/1993 1.7 (K48E) 10/1989-12/1993

1.7 (K/S481) 06/1986-03/1993

21 Estate Van (S48_)

1.7 06/1986-04/1995

19 II Cabriolet (D53_, 853_)

1.8 16V (D53D) 05/1992-04/1994 1.8 16V (D53D) 04/1992-06/1996

1.8 (D53V, 853F, D53C) 07/1994-06/1996

1.8 (D53V, 853F, D53C) 07/1994-06/1996 1.7 (D53C) 04/1992-09/1993

1.8 (D53V, 853F, D53C) 07/1994-06/1996 1.7 (D53C) 04/1992-09/1993

1.8 (853A) 09/1993-06/1996 1.8 (853A) 09/1993-06/1996

TRAFIC Van (T_, P_, V_)

1.7 06/1986-04/1989 1.7 08/1992-08/1994 1.9 D 06/1997-03/2001

1.9 D 06/1997-03/2001

TRAFIC Platform/Chassis (T_, P_, V_)

1.7 06/1986-04/1989 1.7 05/1989-08/1994

TWINGO I (C06_)

1.2 (C063, C064) 03/1993-10/1996 1.2 (C063, C064) 03/1993-10/1996

19 I Cabriolet (D53_)

1.8 16V (D53D) 07/1991-04/1992 1.8 16V (D53D) 07/1991-04/1992

1.7 07/1991-04/1992 1.7 07/1991-04/1992

MEGANE I Classic (LA0/1_)

2.0 i (LA07, LA0G) 09/1996-08/2003 1.9 TDI 09/1996-08/2003

1.6 e (LA0F, LA0S) 09/1996-03/1999 1.4 (LA0E, LA0V) 09/1996-08/2003

2.0 i (LA07, LA0G) 09/1996-08/2003 1.9 dT (LA0K, LA0Y) 09/1996-08/2003

1.9 D (LA0A, LA0U, LA0R) 09/1996-08/2003

2.0 i (LA07, LA0G) 09/1996-08/2003 1.9 TDI 09/1996-08/2003

1.9 dT (LA0K, LA0Y) 09/1996-08/2003 2.0 i (LA07, LA0G) 09/1996-08/2003

2.0 i (LA07, LA0G) 09/1996-08/2003 1.6 e (LA0F, LA0S) 09/1996-03/1999

1.4 (LA0E, LA0V) 09/1996-08/2003 2.0 i (LA07, LA0G) 09/1996-08/2003

1.9 D (LA0A, LA0U, LA0R) 09/1996-08/2003

2.0 i (LA07, LA0G) 09/1996-08/2003 1.6 i (LA0L) 09/1996-03/1999

1.9 D (LA0A, LA0U, LA0R) 09/1996-08/2003

1.6 e (LA0F, LA0S) 09/1996-03/1999

1.9 dTi (LA08, LA0N, LA0K) 03/1997-02/2001

1.9 dTi (LA08, LA0N, LA0K) 03/1997-02/2001

1.9 dTi (LA08, LA0N, LA0K) 03/1997-02/2001

1.9 dTi (LA08, LA0N, LA0K) 03/1997-02/2001

MEGANE I (BA0/1_)

1.4 e (BA0E, BA0V) 01/1996-08/2003

1.6 e (BA0F, BA0S) 01/1996-03/1999

1.6 e (BA0F, BA0S) 01/1996-03/1999

1.4 Eco (BA0T) 01/1996-03/1999

1.9 D Eco (BA0A, BA0U, BA0R) 01/1996-08/2003

1.9 D Eco (BA0A, BA0U, BA0R) 01/1996-08/2003

1.4 e (BA0E, BA0V) 01/1996-08/2003

1.9 dT (B/SA0K, B/SA0Y) 01/1996-08/2003

2.0 i (BA0G) 01/1996-08/2003

2.0 i (BA0G) 01/1996-08/2003

1.9 D Eco (BA0A, BA0U, BA0R) 01/1996-08/2003

1.6 e (BA0F, BA0S) 01/1996-03/1999

1.9 dT (B/SA0K, B/SA0Y) 01/1996-08/2003

1.6 i (BA0L) 01/1996-03/1999

1.9 TDI 09/1996-08/2003

1.9 TDI 09/1996-08/2003

1.9 dTi (BA08, BA0N) 03/1997-02/2001

1.9 dTi (BA08, BA0N) 03/1997-02/2001

2.0 16V (BA0H) 07/1996-08/2003

2.0 16V (BA0H) 07/1996-08/2003

1.9 dTi (BA08, BA0N) 03/1997-02/2001

1.9 dTi (BA08, BA0N) 03/1997-02/2001

LAGUNA I (B56_, 556_)

2.0 (B56C/H/N) 11/1993-03/2001

1.8 (B56A/B) 11/1993-03/2001

1.8 (B56S/T/0) 08/1995-03/2001

1.8 (B56S/T/0) 08/1995-03/2001

1.8 (B56Z) 08/1995-03/2001 1.8 (B56Z) 08/1995-03/2001

2.0 (B56C/H/N) 11/1993-03/2001 1.8 (B56A/B) 11/1993-03/2001

1.9 dTi (B56J) 10/1997-03/2001 1.9 dTi (B56J) 10/1997-03/2001

1.9 dTi (B56J) 10/1997-03/2001 2.0 03/1999-03/2001

MEGANE Scénic (JA0/1_)

1.9 dT (JA0K, JA0Y) 01/1997-09/1999 1.6 e (JA0F) 10/1996-10/1999

1.9 dT (JA0K, JA0Y) 01/1997-09/1999 2.0 i (JA0G) 01/1997-09/1999

1.6 e (JA0F) 10/1996-10/1999 1.6 i (JA0L) 01/1997-09/1999

1.4 i (JA0E) 01/1997-09/1999 2.0 i (JA0G) 01/1997-09/1999

1.9 D (JA0J) 03/1997-09/1999 1.9 dTi (JA0N) 04/1997-09/1999

1.9 dTi (JA0N) 04/1997-09/1999

MEGANE I Coach (DA0/1_)

1.6 e (DA0F) 03/1996-03/1999 1.6 e (DA0F) 03/1996-03/1999

2.0 16V (DA0H) 03/1996-11/1999 2.0 i (DA0G) 03/1996-08/2003

2.0 16V (DA0H) 03/1996-11/1999 2.0 i (DA0G) 03/1996-08/2003

2.0 i (DA0G) 03/1996-08/2003 1.9 dTi (DA0N) 03/1997-02/2001

1.9 dTi (DA0N) 03/1997-02/2001 1.9 dTi (DA0N) 03/1997-02/2001

LAGUNA I Grandtour (K56_)

1.8 (K56Z) 09/1995-03/2001 1.8 (K56S/T/0) 09/1995-03/2001

1.8 (K56Z) 09/1995-03/2001 1.8 (K56S/T/0) 09/1995-03/2001

1.8 (K56Z) 09/1995-03/2001 2.0 (K56C/H) 09/1995-03/2001

2.0 (K56C/H) 09/1995-03/2001 1.9 dTi (K56J) 10/1997-03/2001

1.9 dTi (K56J) 10/1997-03/2001 1.9 dTi (K56J) 10/1997-03/2001

MEGANE I Grandtour (KA0/1_)

1.4 e (KA0V) 03/1999-08/2003

1.9 dTi (KA0N) 03/1999-02/2001

1.6 e (KA0F) 03/1999-08/2003

1.6 e (KA0F) 03/1999-08/2003

1.9 dTi (KA0N) 03/1999-02/2001

ESPACE III (JE0_)

2.0 (JE0A) 11/1996-10/2000

2.0 (JE0A) 11/1996-10/2000

2.0 (JE0A) 11/1996-10/2000

2.0 (JE0A) 11/1996-10/2000

2.0 (JE0A) 11/1996-10/2000

SPORT SPIDER (EF0_)

2.0 16V 03/1995-10/1999

MEGANE I Cabriolet (EA0/1_)

2.0 (EA0G) 04/1997-08/2003

1.6 e (EA0F) 10/1996-03/1999

2.0 16V (EA0H) 10/1996-11/1999

2.0 16V (EA0H) 10/1996-11/1999

2.0 (EA0G) 04/1997-08/2003

1.6 e (EA0F) 10/1996-03/1999

2.0 i (EA0G) 03/1999-08/2003

2.0 i (EA0G) 03/1999-08/2003

CLIO II (BB_, CB_)

1.4 (B/CB0C, B/CB0S) 09/1998-05/2005

1.9 D (B/CB0E, BB0J) 09/1998-05/2005

1.4 (B/CB0C, B/CB0S) 09/1998-05/2005

1.9 D (B/CB0E, BB0J) 09/1998-05/2005

1.4 (B/CB0C, B/CB0S) 09/1998-05/2005

1.4 (B/CB0C, B/CB0S) 09/1998-05/2005

1.9 dTi (B/CB0U) 12/1999-05/2005

1.9 dTi (B/CB0U) 12/1999-05/2005

1.6 (B/CB0D, BB00) 09/1998-05/2005

1.6 (B/CB0D, BB00) 09/1998-05/2005 1.6 (B/CB0D, BB00) 09/1998-05/2005

KANGOO Express (FC0/1_)

1.4 (FC0C, FC0B, FC0H, FC0M) 08/1997-06/2008

1.4 (FC0C, FC0B, FC0H, FC0M) 08/1997-06/2008

D 65 1.9 (FC0E, FC02, FC0J, FC0N) 08/1997 D 55 1.9 (FC0D) 08/1997

1.4 (FC0C, FC0B, FC0H, FC0M) 08/1997-06/2008

1.4 (FC0C, FC0B, FC0H, FC0M) 08/1997-06/2008

1.4 (FC0C, FC0B, FC0H, FC0M) 08/1997-06/2008

D 65 1.9 (FC0E, FC02, FC0J, FC0N) 08/1997

KANGOO (KC0/1_)

D 65 1.9 (KC0E, KC02, KC0J, KC0N) 08/1997-06/2001

1.4 (KC0C, KC0H, KC0B, KC0M) 08/1997

D 65 1.9 (KC0E, KC02, KC0J, KC0N) 08/1997-06/2001

1.4 (KC0C, KC0H, KC0B, KC0M) 08/1997

1.4 (KC0C, KC0H, KC0B, KC0M) 08/1997 D 55 1.9 (KC0D) 08/1997

1.4 (KC0C, KC0H, KC0B, KC0M) 08/1997

1.4 (KC0C, KC0H, KC0B, KC0M) 08/1997

CLIO II Hatchback Van (SB0/1/2_)

1.9 D (SB0E) 09/1998

VOLVO

340-360 (343, 345)

1.7 08/1985-07/1991 1.6 Diesel 08/1984-07/1991

340-360 Saloon (344)

1.7 08/1985-07/1991 1.6 Diesel 08/1984-07/1991

480 (482)

1.7 08/1986-07/1988 1.7 08/1987-07/1989 1.7 Turbo 01/1991-07/1996

1.7 08/1989-07/1996 1.7 04/1986-07/1989 1.7 Turbo 08/1987-07/1996

2.0 08/1992-09/1995

440 (445)

1.7 08/1988-07/1989 1.7 09/1988-08/1992 1.7 09/1988-08/1989

1.7 09/1988-08/1989 1.6 09/1991-08/1993 1.7 09/1988-08/1989

1.7 Turbo 08/1988-07/1996 2.0 08/1993-07/1996 1.8 08/1991-07/1996

2.0 08/1992-07/1995 1.7 08/1989-12/1996 1.7 09/1988-12/1996

1.7 09/1988-12/1996 1.8 09/1995-12/1996 1.6 09/1988-12/1996

1.7 Turbo 01/1991-12/1996

460 (464)

1.7 09/1990-07/1996 1.8 08/1991-07/1996 1.7 Turbo 08/1989-07/1996

2.0 08/1992-07/1995 2.0 08/1993-07/1996 1.7 08/1989-07/1992

1.7 08/1989-07/1992 1.6 07/1992-07/1996 1.7 Turbo 01/1991-07/1996

1.7 09/1988-07/1996

V40 Estate (645)

1.9 TD 07/1995-08/1999 1.9 DI 03/1999-07/2000

S40 I (644)

1.9 TD 07/1995-08/1999 1.9 DI 03/1999-07/2000

MITSUBISHI

CARISMA (DA_)

1.9 TD (DA4A) 10/1996-09/2000

CARISMA Saloon (DA_)

1.9 TD (DA4A) 10/1996-09/2000