SINTLY

SINTLY | STARTER MOTOR

XTLSTR4015

VOLTAGE 12 V

POWER 1.10 kW

APPLICATIONS HYUNDAI, MITSUBISHI, RENAULT, VOLVO

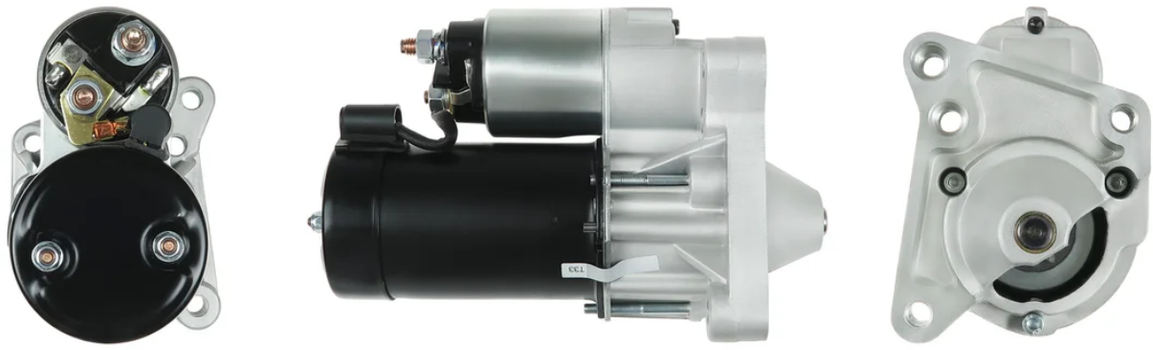

DIMENSIONS

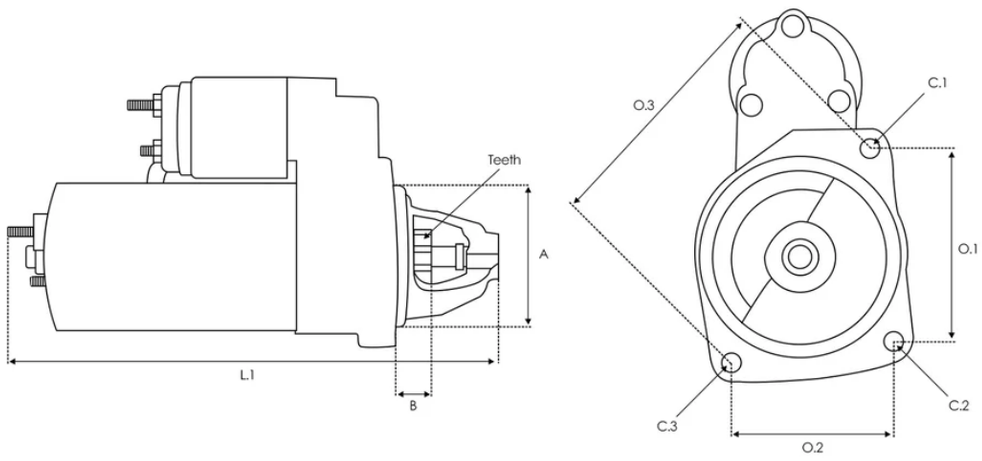

A 66.00 mm B -1.00 mm Teeth 10 qty L.1 208.00 mm O.1 105.00 mm O.2 73.00 mm O.3 22.00 mm C.1 M10x1.5 mm C.2 M10x1.5 mm C.3 M10x1.5 mm

OE 编号

Other	432622

替代编码

3EFFE	STRL084
AINDE	CGB-23955

ANDEL	ANM15488X
APEC	ASM1578
AS-PL	S3004 UD12068S
AUTO MAGNETO	AM-2251
AUTOELECTRO	AES9197
BOSCH	0986016400 0986016401
CARGO	111251 F032111251
CASCO	CST10117 CST10117AS CST10117ES CST10117GS CST10117OS CST10117RS CST15102 CST15102AS CST15102ES CST15102GS CST15102OS CST15102RS
CEVAM	3813
DAF	1516788R
DIXIE	S-6552
EAI	11527
ELECTROLOG	STR0011
ELSTOCK	25-1281

ERA	220045
FORD	ESA150
GHIBAUDI	SG0397
GPARTS	GS432622-A GS432622V-R
HC PARTS	CS681
HELLA	8EA011610-501 8EA730197-001
HERTH+BUSS	42016401
IKA	6.0003.9
ISKRA / LETRIKA	11139403 IS9403
KRAUF	STV0681
KUHNER	10681 10681L 10681V
LUCAS	LRT00194
MAGNETI MARELLI	359001400150 943251489010 944280164010 MO0015MA MRS16401 MSR671
MAHLE	MS 39
MEAT & DORIA	5015098
MITSUBISHI	M002T48381 M003T32985 M003T32986

	M003T32988 M003T32989 M003T32991 M2T48381 M3T32985 M3T32986 M3T32988 M3T32989 M3T32991 N3T42581
NAPA	NPANSM1578
PEUGEOT	0000434120 580273 580276
POWERMAX	88212668
PRESTOLITE	20513048 35258560 35258720 EL25129
REAL	20479201
RENAULT	310404 310492 7700100647 7700105080 7700272482 7700352049 7700703490 7700715116 7700758217 7700796488 7700853827 7700854349 7700854954 7700854955 7700865719 7700871057 7701349264 7701349265 7701351027 7701351390 7701351772 7701352049 7701353827 7701499200 7701499247 7701499467 7701499482 7701853827 7708758174 7709758174 7711134260
RNL	RNL1640 RNL1859
ROBERT'S	120-10215
SANDO	6010117 6015102 6015102.1
SIDAT	S12VA0051A2
SIOM	MAV122180 MAV4510 MAV4570 MAV4720

SOVEREIGN	SS250
STARDAX	STX200015 STX200015R STX200079 STX200079R STX200155 STX200302 STX200302R STX200636 STX200705
VALEO	436060 726001 D6RA133 D6RA33 D6RA46 D6RA56 D6RA6 D6RA61 D6RA73
VOLVO	3412455 3430012 8111701 9031302
WAI	30177N 570.518.104 570.518.104.000 570.518.104.008 570.518.104.340 570.518.104.500 570.518.104.608 S133.794 S145.393 S148.893
WOODAUTO	STR54012 VAL432622

适用车型

RENAULT

SUPER 5 (B/C40_)

1.4 (B/C40J) 06/1987-07/1989

1.1 (B/C/401) 10/1984-10/1988

1.7 (B/C40K, B/C40G) 06/1987-03/1995

1.1 (B/C/401, B/C40H) 01/1986-03/1995

1.0 (B/C/400) 10/1984-10/1988

1.4 (B/C403) 10/1984-07/1989

1.4 (B/C403) 10/1984-07/1989

1.1 (B/C/401, B/C40H) 01/1986-03/1995

1.4 (B/C403) 10/1984-07/1989

1.7 (B/C40K, B/C40G) 06/1987-03/1995

1.4 (B/C402) 10/1984-06/1988

1.1 (B/C/401) 10/1984-10/1988 1.4 (B/C403) 10/1984-07/1989

1.1 (B/C/401, B/C40H) 01/1986-03/1995 1.4 (B/C403) 10/1984-07/1989

1.1 (B/C/401) 10/1984-10/1988 1.4 (B/C403) 10/1984-07/1989

1.4 (B/C40M) 06/1987-08/1990 1.4 (B/C402) 10/1984-06/1988

1.1 (B/C/401, B/C40H) 01/1986-03/1995 1.7 i (C409) 10/1986-08/1991

1.7 i (C409) 10/1986-08/1991 1.7 (B/C408) 10/1986-03/1995

1.7 (B/C408) 10/1986-03/1995

MEGANE I Classic (LA0/1_)

2.0 i (LA07, LA0G) 09/1996-08/2003 1.6 e (LA0F, LA0S) 09/1996-03/1999

1.4 (LA0E, LA0V) 09/1996-08/2003 2.0 i (LA07, LA0G) 09/1996-08/2003

2.0 i (LA07, LA0G) 09/1996-08/2003 2.0 i (LA07, LA0G) 09/1996-08/2003

2.0 i (LA07, LA0G) 09/1996-08/2003 1.6 e (LA0F, LA0S) 09/1996-03/1999

1.4 (LA0E, LA0V) 09/1996-08/2003 2.0 i (LA07, LA0G) 09/1996-08/2003

2.0 i (LA07, LA0G) 09/1996-08/2003 1.6 e (LA0F, LA0S) 09/1996-03/1999

2.0 i (LA0G) 03/1999-08/2003 2.0 i (LA0G) 03/1999-08/2003

2.0 i (LA0G) 03/1999-08/2003 2.0 i (LA0G) 03/1999-08/2003

2.0 i (LA0G) 03/1999-08/2003 2.0 i (LA0G) 03/1999-08/2003

2.0 i (LA0G) 03/1999-08/2003 2.0 RT 10/1996-02/1999

2.0 05/1998-05/2001 2.0 05/1998-05/2001 2.0 05/1998-05/2001

2.0 05/1998-05/2001 2.0 05/1998-05/2001 2.0 05/1998-05/2001

1.6 i (LA0L) 09/1996-03/1999

1.6 16V (LA00, LA04, LA0B, LA11, LA16, LA19, LA1J, LA1K,... 03/1999-07/2003

1.6 16V (LA00, LA04, LA0B, LA11, LA16, LA19, LA1J, LA1K,... 03/1999-07/2003

1.6 16V (LA00, LA04, LA0B, LA11, LA16, LA19, LA1J, LA1K,... 03/1999-07/2003

1.6 16V (LA00, LA04, LA0B, LA11, LA16, LA19, LA1J, LA1K,... 03/1999-07/2003

1.6 16V (LA00, LA04, LA0B, LA11, LA16, LA19, LA1J, LA1K,... 03/1999-07/2003

1.6 02/2000-09/2000

RAPID Box Body/MPV (F40_, G40_)

1.1 (F401) 07/1985-04/1995

1.1 (F401) 07/1985-04/1995

1.1 (F401) 07/1985-04/1995

1.1 (F401) 07/1985-04/1995

1.1 (F401) 07/1985-04/1995

1.2 (F406, G40A) 09/1991-03/1998

1.1 (F40H) 06/1987-09/1991

1.2 (F406, G40A) 09/1991-03/1998

1.1 (F401) 07/1985-04/1995

1.4 (F402) 07/1985-08/1991

1.4 (F402) 07/1985-08/1991

1.4 Cat (F407) 08/1988-03/1998

1.4 (F40U, F40V) 09/1991-03/1998

1.4 (F40U, F40V) 09/1991-03/1998

1.4 (F40D) 01/1994-03/1998

1.4 (F40U, F40V) 09/1991-03/1998

1.4 Cat (F407) 08/1988-03/1998

1.4 (F40U, F40V) 09/1991-03/1998

1.4 Cat (F407) 08/1988-03/1998

1.4 Cat (F407) 08/1988-03/1998

1.4 09/1991-08/1993

1.4 05/1995-08/1997

1.4 (F40Y, F40A, F40V) 09/1991-08/1997

1.4 (F40Y, F40A, F40V) 09/1991-08/1997

1.4 (F40Y, F40A, F40V) 09/1991-08/1997

MEGANE I (BA0/1_)

1.4 e (BA0E, BA0V) 01/1996-08/2003

1.6 e (BA0F, BA0S) 01/1996-03/1999

1.6 e (BA0F, BA0S) 01/1996-03/1999

1.4 Eco (BA0T) 01/1996-03/1999

1.4 e (BA0E, BA0V) 01/1996-08/2003

2.0 i (BA0G) 01/1996-08/2003

2.0 i (BA0G) 01/1996-08/2003 1.6 e (BA0F, BA0S) 01/1996-03/1999

2.0 i 03/1999-08/2003 2.0 i 03/1999-08/2003 1.6 LPG 08/1995-03/1999

2.0 05/1998-05/2001 2.0 05/1998-05/2001 2.0 05/1998-05/2001

2.0 05/1998-05/2001 2.0 05/1998-05/2001 2.0 05/1998-05/2001

1.6 i (BA0L) 01/1996-03/1999 1.9 dTi (BA08, BA0N) 03/1997-02/2001

1.9 dTi (BA08, BA0N) 03/1997-02/2001 2.0 16V (BA0H) 07/1996-08/2003

2.0 16V (BA0H) 07/1996-08/2003 1.9 dTi (BA08, BA0N) 03/1997-02/2001

1.9 dTi (BA08, BA0N) 03/1997-02/2001

LAGUNA I (B56_, 556_)

2.0 (B56C/H/N) 11/1993-03/2001 1.8 (B56A/B) 11/1993-03/2001

1.8 (B56S/T/0) 08/1995-03/2001 1.8 (B56S/T/0) 08/1995-03/2001

1.8 (B56Z) 08/1995-03/2001 1.8 (B56Z) 08/1995-03/2001

2.0 (B56C/H/N) 11/1993-03/2001 1.8 (B56A/B) 11/1993-03/2001

2.0 03/1999-03/2001 1.8 06/1995-06/1998 1.8 06/1995-02/2001

1.8 06/1995-06/1998 2.0 06/1995-02/2001 2.0 06/1995-02/2001

CLIO I (B/C57_, 5/357_)

1.8 Rsi (B/C57H) 08/1995-09/1998 1.8 (B/C57C, B/C57U) 01/1991-09/1998

1.8 (B/C57C, B/C57U) 01/1991-09/1998

1.8 (B/C57C, C579, B/C57U) 08/1994-04/1996

1.8 Rsi (B/C579) 01/1993-08/1995

1.8 (B/C57C, C579, B/C57U) 08/1994-04/1996

1.8 (B/C57C, C579, B/C57U) 08/1994-04/1996 1.8 01/1991-09/1998

1.8 (357A, 357D, 357U, 557A, 557D, 557U, B578, C578) 04/1996-08/1999

1.4 (B/C57T, B/C57Y) 01/1991-09/1998 1.4 (B/C57T, B/C57Y) 01/1991-09/1998

1.4 (B/C57T, B/C57Y) 01/1991-09/1998

1.2 (B/C/S57A, B/C57S, 5/357F, 5/357J, 5/357L, 5/357R) 05/1990-09/1998

1.2 (B/C/S57A, B/C57S, 5/357F, 5/357J, 5/357L, 5/357R) 05/1990-09/1998

1.2 (B/C/S57A, B/C57S, 5/357F, 5/357J, 5/357L, 5/357R) 05/1990-09/1998

1.4 (B/C57T, B/C57Y) 01/1991-09/1998 1.4 01/1991-09/1998

1.2 (B/C57R, B575, B57A) 01/1991-06/1996

1.2 (B/C57R, B575, B57A) 01/1991-06/1996

1.2 (B/C57R, B575, B57A) 01/1991-06/1996

1.2 (B/C57R, B575, B57A) 01/1991-06/1996 1.4 01/1991-09/1998

1.2 (B/C57R, B575, B57A) 01/1991-06/1996

1.4 (B57J, C57J, B57P) 01/1991-09/1998

1.4 (B57J, C57J, B57P) 01/1991-09/1998

1.4 (B57J, C57J, B57P) 01/1991-09/1998 1.2 (B/C/S572) 05/1990-03/1996

1.4 05/1990-02/1998 1.4 05/1990-02/1998 1.4 05/1990-02/1998

Williams (B/C57M) 01/1994-09/1998

9 (L42_)

1.2 (L42S) 09/1985-12/1988 1.2 (L42S) 09/1985-12/1988

1.7 (L42E) 06/1987-12/1988 1.7 (L42L) 10/1986-12/1988

1.7 (L42F) 10/1986-12/1988

19 I Chamade (L53_)

1.4 (L532, L53P) 07/1988-04/1992 1.4 (L532, L53P) 07/1988-04/1992

1.7 09/1990-04/1992 1.7 (L53F) 08/1988-12/1992 1.4 09/1990-04/1992

1.7 (L53C) 07/1988-04/1992 1.7 (L53C) 07/1988-04/1992

1.7 (L53B) 10/1989-04/1992 1.7 (L53B) 10/1989-04/1992

1.8 16V (L53D) 10/1989-04/1992 1.7 (L533) 09/1988-12/1992

1.7 (L533) 09/1988-12/1992

MEGANE Scénic (JA0/1_)

1.6 e (JA0F) 10/1996-10/1999 2.0 i (JA0G) 01/1997-09/1999

1.6 e (JA0F) 10/1996-10/1999 1.4 i (JA0E) 01/1997-09/1999

2.0 i (JA0G) 01/1997-09/1999 2.0 i (JA02, JA0G) 01/1999-09/1999

2.0 i (JA02, JA0G) 01/1999-09/1999 2.0 i (JA02, JA0G) 01/1999-09/1999

2.0 i (JA02, JA0G) 01/1999-09/1999 2.0 i (JA02, JA0G) 01/1999-09/1999

2.0 i (JA02, JA0G) 01/1999-09/1999 1.6 i (JA0L) 01/1997-09/1999

MEGANE I Coach (DA0/1_)

1.6 e (DA0F) 03/1996-03/1999 1.6 e (DA0F) 03/1996-03/1999

2.0 i (DA0G) 03/1996-08/2003 2.0 i (DA0G) 03/1996-08/2003

2.0 i (DA0G) 03/1996-08/2003 2.0 i 03/1999-08/2003 2.0 i 03/1999-08/2003

2.0 i 03/1999-08/2003 2.0 i 03/1999-08/2003 2.0 i 03/1999-08/2003

2.0 i 03/1999-08/2003 2.0 16V (DA0H) 03/1996-11/1999

2.0 16V (DA0H) 03/1996-11/1999

2.0 16V IDE (DA03, DA0P, DA14) 11/1999-08/2003

LAGUNA I Grandtour (K56_)

1.8 (K56Z) 09/1995-03/2001 1.8 (K56S/T/0) 09/1995-03/2001

1.8 (K56Z) 09/1995-03/2001 1.8 (K56S/T/0) 09/1995-03/2001

1.8 (K56Z) 09/1995-03/2001 2.0 (K56C/H) 09/1995-03/2001

2.0 (K56C/H) 09/1995-03/2001 2.0 10/1998-01/2001 2.0 10/1998-01/2001

19 I (B/C53_)

1.4 Cat (B/C532) 01/1989-04/1992 1.8 05/1992-09/1994

1.7 07/1988-04/1992 1.7 07/1988-04/1992 1.7 09/1988-04/1992

1.4 01/1988-12/1992 1.4 01/1988-12/1992 1.7 06/1989-04/1992

1.4 09/1990-04/1992 1.8 16V (B/C53D) 06/1989-04/1992

1.7 (B/C53C) 09/1988-04/1992 1.7 (B/C53B) 09/1988-04/1992

1.7 (B/C53C) 09/1988-04/1992 1.7 (B/C53B) 09/1988-04/1992

MEGANE I Grandtour (KA0/1_)

1.4 e (KA0V) 03/1999-08/2003 1.6 e (KA0F) 03/1999-08/2003

1.6 e (KA0F) 03/1999-08/2003

ESPACE III (JE0_)

2.0 (JE0A) 11/1996-10/2000 2.0 (JE0A) 11/1996-10/2000

2.0 (JE0A) 11/1996-10/2000 2.0 (JE0A) 11/1996-10/2000

2.0 (JE0A) 11/1996-10/2000

SPORT SPIDER (EF0_)

2.0 16V 03/1995-10/1999

MEGANE I Cabriolet (EA0/1_)

2.0 (EA0G) 04/1997-08/2003 1.6 e (EA0F) 10/1996-03/1999

2.0 16V (EA0H) 10/1996-11/1999 2.0 16V (EA0H) 10/1996-11/1999

2.0 (EA0G) 04/1997-08/2003 1.6 e (EA0F) 10/1996-03/1999

2.0 i (EA0G) 03/1999-08/2003 2.0 i (EA0G) 03/1999-08/2003

2.0 16V IDE (EA03, EA0P, EA14) 11/1999-08/2003

TRAFIC Platform/Chassis (T_, P_, V_)

1.7 05/1989-08/1994 1.7 06/1986-04/1989

CLIO I Hatchback Van (S57_)

1.2 06/1994-02/1998 1.2 01/1991-09/1998 1.2 01/1991-09/1998

1.2 01/1991-09/1998

TRAFIC Van (T_, P_, V_)

1.7 03/1989-08/1994 1.7 06/1986-04/1989 1.7 08/1992-08/1994

19 II Cabriolet (D53_, 853_)

1.8 (D53Y) 04/1992-01/1996 1.8 (D53Y) 04/1992-01/1996

1.8 (D53Y) 04/1992-06/1996 1.8 (D53V, 853F, D53C) 07/1994-06/1996

1.8 (D53Y) 04/1992-06/1996 1.8 (D53V, 853F, D53C) 07/1994-06/1996

1.8 (D53Y) 04/1992-06/1996 1.8 (D53Y) 04/1992-06/1996

1.7 (D53C) 04/1992-09/1993 1.8 (D53Y) 04/1992-06/1996

1.8 (D53V, 853F, D53C) 07/1994-06/1996 1.7 (D53C) 04/1992-09/1993

1.8 (D53Y) 04/1992-06/1996 1.8 (853A) 09/1993-06/1996

1.8 (853A) 09/1993-06/1996

19 II (B/C53_)

1.4 (B/C535) 01/1992-12/1995 1.4 01/1992-12/1995 1.4 01/1992-12/1995

1.7 (B/C53C) 04/1992-12/1995 1.2 05/1992-09/1994 1.4 05/1993-12/1998

1.8 (B/C53Y) 04/1992-12/1995 1.7 (B/C53B) 04/1992-12/1995

1.7 (B/C53B) 04/1992-12/1995 1.8 (5/353F, B/C538) 05/1994-12/1995

1.8 (B/C538) 04/1992-05/1994 1.8 16V (B/C53D) 04/1992-12/1995

1.8 (5/353F, B/C538) 05/1994-12/1995 1.8 (B/C53Y) 04/1992-12/1995

1.8 (5/353A) 04/1992-12/1995 1.8 (5/353A) 04/1992-12/1995

1.8 (B/C53Y) 04/1992-12/1995 1.8 (B/C53Y) 04/1992-12/1995

21 Saloon (L48_)

1.7 (L481) 03/1986-12/1987 1.7 04/1986-06/1989 1.7 04/1986-06/1989

1.7 (L48M, L48F) 07/1986-02/1994 1.7 (L48E) 03/1986-02/1994

1.7 (L48E) 09/1989-02/1994 1.7 (L48M, L48F) 07/1986-02/1994

1.7 (L48E) 03/1986-02/1994 1.7 (L482) 03/1986-03/1993

1.7 (L48E) 09/1989-02/1994

19 II Chamade (L53_)

1.4 (L535) 11/1993-12/1995 1.2 05/1992-09/1994 1.4 10/1994-11/1995

1.4 10/1994-11/1995 1.8 05/1992-09/1994 1.8 05/1992-11/1995

1.7 05/1992-11/1995 1.8 05/1992-11/1995 1.7 05/1992-11/1995

1.8 (L538) 04/1992-05/1994 1.8 (L53V, L538) 05/1994-12/1995

1.8 (L53Y) 04/1992-12/1995 1.8 (L53Y) 04/1992-12/1995

1.8 (L53Y) 04/1992-12/1995 1.7 (L53B) 04/1992-12/1995

1.8 (453A/F) 04/1992-12/1995 1.8 (L53Y) 04/1992-12/1995

1.8 (L53Y) 04/1992-12/1995 1.8 (453A/F) 04/1992-12/1995

1.7 (L53B) 04/1992-12/1995 1.8 (L53Y) 04/1992-12/1995

1.7 (L533) 01/1993-08/1995 1.7 (L53C) 04/1992-12/1995

1.7 (L533) 01/1993-08/1995 1.7 (L53C) 04/1992-12/1995

TRAFIC Bus (T_, P_, V_)

1.7 08/1992-08/1994 1.7 06/1986-04/1989

CLIO II (BB_, CB_)

1.4 (B/CB0C, B/CB0S) 09/1998-05/2005

1.4 (B/CB0C, B/CB0S) 09/1998-05/2005

1.4 (B/CB0C, B/CB0S) 09/1998-05/2005

1.4 (B/CB0C, B/CB0S) 09/1998-05/2005

1.6 (B/CB0D, BB00) 09/1998-05/2005

1.6 (B/CB0D, BB00) 09/1998-05/2005

1.6 (B/CB0D, BB00) 09/1998-05/2005

KANGOO Express (FC0/1_)

1.4 (FC0C, FC0B, FC0H, FC0M) 08/1997-06/2008

1.4 (FC0C, FC0B, FC0H, FC0M) 08/1997-06/2008

1.4 (FC0C, FC0B, FC0H, FC0M) 08/1997-06/2008

1.4 (FC0C, FC0B, FC0H, FC0M) 08/1997-06/2008

1.4 (FC0C, FC0B, FC0H, FC0M) 08/1997-06/2008

21 Estate (K48_)

1.7 (K48M) 06/1986-12/1989

1.7 (K/S481) 06/1986-03/1993

1.7 (K48E) 10/1989-12/1993

1.7 (K48E) 06/1986-12/1989

1.7 (K48E) 06/1986-12/1989

1.7 Cat (K48F) 05/1988-06/1993

1.7 (K48E) 10/1989-12/1993

KANGOO (KC0/1_)

1.4 (KC0C, KC0H, KC0B, KC0M) 08/1997

1.4 (KC0C, KC0H, KC0B, KC0M) 08/1997

1.4 (KC0C, KC0H, KC0B, KC0M) 08/1997

1.4 (KC0C, KC0H, KC0B, KC0M) 08/1997

1.4 (KC0C, KC0H, KC0B, KC0M) 08/1997

19 II Hatchback Van (S53_)

1.4 03/1992-12/1995

19 I Cabriolet (D53_)

1.7 07/1991-04/1992 1.7 07/1991-04/1992 1.7 07/1991-04/1992

11 (B/C37_)

1.7 (B/C37F) 10/1984-12/1988 1.7 (B/C37E) 06/1987-12/1988

21 (B48_)

1.7 07/1989-05/1993 1.7 07/1989-05/1993 1.7 07/1989-05/1993

1.7 07/1989-05/1993 1.7 (B48F) 09/1989-10/1992

1.7 (B48E) 09/1989-06/1994 1.7 (B48E) 09/1989-06/1994

VOLVO

460 (464)

1.8 08/1991-07/1996 1.7 Turbo 08/1989-07/1996 2.0 08/1992-07/1995

2.0 08/1993-07/1996 1.7 08/1989-07/1992 1.7 08/1989-07/1992

1.6 07/1992-07/1996 1.7 Turbo 01/1991-07/1996 1.7 09/1988-07/1996

1.7 09/1989-08/1991

440 (445)

1.7 Turbo 08/1988-07/1996 2.0 08/1993-07/1996 1.8 08/1991-07/1996

2.0 08/1992-07/1995 1.7 08/1989-12/1996 1.7 09/1988-12/1996

1.7 09/1988-12/1996 1.8 09/1995-12/1996 1.6 09/1988-12/1996

1.7 Turbo 01/1991-12/1996

480 (482)

1.7 Turbo 01/1991-07/1996 1.7 08/1989-07/1996

1.7 Turbo 08/1987-07/1996 2.0 08/1992-09/1995