SINTLY

SINTLY | STARTER MOTOR **XTLSTR4024**

VOLTAGE **12** V

POWER **1.00** kW

APPLICATIONS CITROËN, PEUGEOT

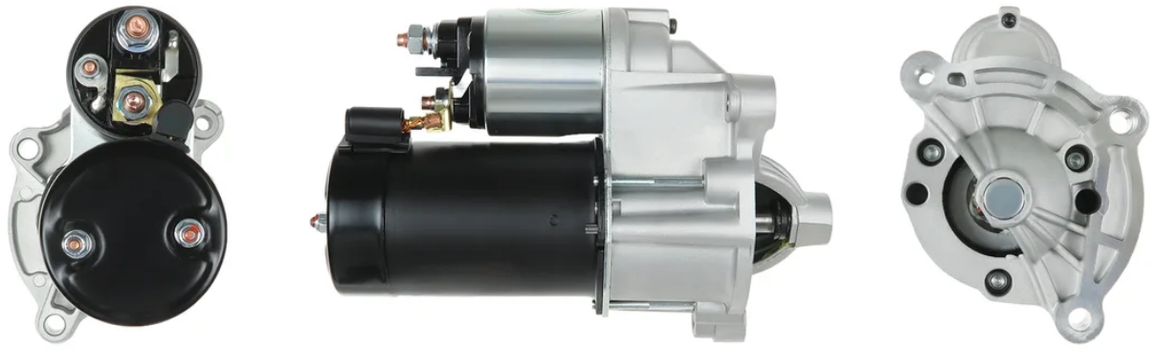

DIMENSIONS

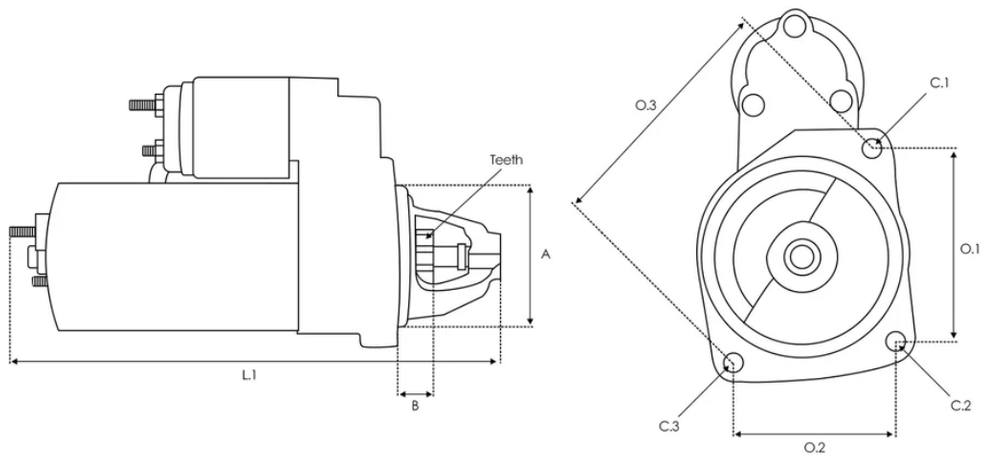


B -5.00 mm Teeth 9 qty. L.1 213.00 mm O.1 85.00 mm O.2 120.00 mm O.3 85.00 mm C.1 9.00 mm C.2 9.00 mm C.3 M8x1.25 mm

## OE 编号

| | |
|---|---|
| Other | 438086 |

## 替代编码

| | |
|---|---|
| 3EFFE | PRSL086 STRL086 |
| AINDE | AI-80001 |

| | |
|---|---|
| ANDEL | ANM15328X |
| APEC | ASM1588 |
| AS-PL | S3010 UD14983S |
| AUTOELECTRO | AES7137 NES7137 |
| BOSCH | 0001112019 0001112029 0986013850 F000AL0327 |
| BOVEZ | STA0011R |
| CARGO | 110584 116306 F032110584 F032116306 |
| CASCO | CST15106AS CST15106ES CST15106GS CST15106OS CST15106RS |
| CEVAM | 3106 |
| DAF | 1516758R |
| DELCO | DRS3108 DRS3545 DRS3545N DRS3689 DS4218 |
| EAI | 11625 |
| ELECTROLOG | STR00259 STR0039 STR0046 STR0060 STR0084 STR79646 |
| ELSTOCK | 25-1254 25-3083 |

| | |
|---|---|
| ERA | 220012 220392 |
| FIAT | 71794532 9608719280 9626261480 K9609313280 |
| FORD | 3960404 |
| GHIBAUDI | SG0396 |
| HC PARTS | CS390 CS581 |
| HELLA | 8EA726205-001 |
| HERTH+BUSS | 42432575 |
| IKA | 6.0011.9 |
| ISKRA / LETRIKA | 11.130.965 11.139.404 AZD3515 AZE1212 AZE1521 IS0529 IS9404 |
| KRAUF | STB0581 STV0581 STV9581 |
| KUHNER | 101111 101111V 10390 10390V 10581 10581R 10581V |
| LUCAS | LRS00737 LRS02106 LRS2106 LRS737 |
| MAGNETI MARELLI | 063521120410 063720390010 943251136 943251136010 943253115010 944280138500 MQS390 MRS13850 MSR378 |
| MAHLE | MS182 |

| | |
|---|---|
| MEAT & DORIA | 5015036 |
| MITSUBISHI | M002T13081 M003T40371 M2T13081 M3T40371 |
| NAPA | NPANSM1588 |
| PEUGEOT | 558098 5802-CR 5802-E9 5802-ER 5802-F3 5802-J5 5802-M9 5802-Q3 5802-Q7 5802-Q8 5802-Q9 5802-R3 5802-R5 5802000000000 580298 5802A0 5802C2 5802C9 5802CC 5802CG 5802E8 5802EP 5802J1 5802N0 5802N2 5802N3 5802P8 5802Q1 5802R4 5802Y3 9150866480 91536241 9153624180 91536242 95017849R 95155198 95624960 95656490 95667752 95667753 95667753R 96028857 96052193 9605219380 96087192 96087192R 96087193 9608719380 96093132 9609313280 96095132 9618725080 96262614 9633292480 9647982880 9648644680 9658308780 97530824 |
| POWERMAX | 88213335 |
| PRESTOLITE | 20500592 20500737 S1090R S1091R S1208V |
| ROVER | GNU4674 GXE4674 |
| SANDO | 6015102.1 6015106.0 6015106.1 |
| SIDAT | S12VA0002A2 S12VA0113A2 |
| SIOM | MAV171450 MAV3090 MAV3470 MAV371390 |

| | |
|---|---|
| | MAV4630 MAV4720 MAV4740 MAV4790 |
| STARDAX | STX200012 STX200012R STX200041 STX200041R STX200101 STX200101R STX200111 STX200111R STX200317 STX200317R STX201404 |
| VALEO | 432623 436062 438093 455748 455938 455962 726000 726022 726074 726800 726822 D6G3 D6RA100 D6RA37 D6RA57 D6RA571 D6RA572 D7E16 D7E2 D7E23 D7E5 D7E51 D7E7 TS8E2 TS8E2M |
| WAI | 220.008.093 220.008.093.000 220.008.093.215 220.008.093.375 220.008.093.500 220.008.093.506 S131.728 S144.089 S148.755 |
| WOODAUTO | STR54001 |

## 适用车型

### CITROËN

#### XSARA PICASSO (N68)

1.6 16V 06/2005-09/2006 1.6 16V 09/2005-12/2011

1.6 16V LPG 06/2004-12/2010 1.6 12/1999-12/2010 1.6 12/1999-09/2001

1.6 06/2002-08/2005 1.6 Chrono 04/2001-10/2004

#### C3 I (FC_, FN_)

1.6 16V 05/2003-09/2005 1.6 16V 02/2002-08/2010 1.1 i 02/2002-12/2009

1.1 i 02/2002-12/2009 1.4 i Bivalent 02/2002-12/2009

1.4 16V 12/2003-08/2010 1.4 i 02/2002-11/2010 1.4 i 02/2002-11/2010

1.1 LPG 06/2006-12/2009 1.4 BiFuel 09/2008-12/2009

## XSARA (N1)

1.6 16V 09/2000-03/2005 1.6 i 04/1997-09/2000 1.4 i 04/1997-03/2005

1.4 i 04/1997-03/2005 1.4 LPG 05/1998-08/2000

## BERLINGO / BERLINGO FIRST MPV (MF_, GJK_, GFK_)

1.6 16V (MFNFU) 10/2000-12/2011 1.6 16V (MFNFU) 11/2002-10/2008

1.4 i bivalent (MFKFW) 04/2003-10/2008 1.4 bivalent 11/2002-12/2011

1.4 11/2002-10/2005

1.4 i (MFKFX, MFKFW, GJKFWB, GJKFWC, GFKFWC) 07/1996-12/2011

1.1 i (MFHDZ, MFHFX) 07/1996-05/2008

1.4 i (MFKFX, MFKFW, GJKFWB, GJKFWC, GFKFWC) 07/1996-12/2011

1.1 i (MFHDZ, MFHFX) 07/1996-05/2008

1.4 i (MFKFX, MFKFW, GJKFWB, GJKFWC, GFKFWC) 07/1996-12/2011

## XSARA Coupe (N0)

1.6 16V 09/2000-03/2005 1.4 i 03/1998-03/2005 1.4 i 03/1998-03/2005

1.6 i 02/1998-09/2000

## XSARA Break (N2)

1.6 16V 09/2000-08/2005 1.4 i 10/1997-08/2005 1.6 i 10/1997-09/2000

1.4 i 10/1997-08/2005 1.4 LPG 05/1998-08/2000 1.4 LPG 05/1998-08/2000

## C2 (JM_)

1.4 09/2003-12/2009 1.6 VTS 10/2004-12/2009 1.1 09/2003-09/2012

1.4 09/2003-12/2009 1.6 07/2003-10/2010 1.1 09/2003-09/2012

1.4 16V 04/2005-12/2009 1.4 10/2006-12/2009

## C3 Pluriel (HB_)

1.4 05/2003 1.6 05/2003 1.4 05/2003 1.4 07/2003

## BERLINGO / BERLINGO FIRST Box Body/MPV (M_)

1.6 16V (MBNFU) 10/2000-03/2008 1.4 i bivalent (MBKFW) 04/2003-10/2005

1.6 16V 08/2005-12/2007 1.4 bivalent 11/2002-12/2011

1.4 i (MBKFX, MBKFW) 07/1996-12/2011

1.4 i (MBKFX, MBKFW) 07/1996-12/2011

1.1 i (MAHDZ, MBHDZ, MBHFX) 07/1996-03/2008

1.4 i (MBKFX, MBKFW) 07/1996-12/2011

1.1 i (MAHDZ, MBHDZ, MBHFX) 07/1996-03/2008 1.4 i 08/1999-05/2008

1.4 i 08/1999-05/2008 1.4 BiFuel (MBKFXB, MCKFXB) 07/1996-10/2002

## C4 Coupe (LA_)

1.4 16V 11/2004-07/2011 1.6 16V 11/2004-07/2011

## C4 I (LC_)

1.6 16V 11/2004-07/2011 1.4 16V 11/2004-07/2011

1.6 16V Bio-Flex 09/2007-07/2008 1.6 THP 150 07/2008-07/2011

## BERLINGO MULTISPACE (B9)

1.6 04/2008 1.6 04/2008

## NEMO Box Body/MPV (AA_)

1.4 02/2008 1.4 02/2008

## BERLINGO Box Body/MPV (B9)

1.6 04/2008 1.6 04/2008

## C3 II (SC_)

1.4 11/2009-09/2016 1.1 i 09/2009-01/2013 1.4 11/2009-09/2016

1.4 11/2009-09/2016 1.1 i 09/2009-01/2013 1.4 LPG 07/2010-09/2016

## C-ELYSEE (DD_)

1.6 VTi 115 (DDNFP0, DDNFP6, DDNFP9) 11/2012

## NEMO MPV

1.4 04/2009 1.4 04/2009

## C4 I Saloon

1.6 16V 07/2006-07/2011

## C2 ENTERPRISE (JG_)

1.1 11/2003-12/2009 1.1 11/2003-12/2009

## AX (ZA-_)

14 (ZA) 04/1987-04/1997 14 (ZA) 04/1987-04/1997

1.3 Sport (ZAM4A) 04/1987-12/1988 14 01/1988-12/1992

10 07/1986-12/1998 14 4x4 08/1991-12/1996 11 09/1986-12/1997

14 4x4 08/1991-12/1996 14 (ZA) 04/1987-04/1997 14 4x4 08/1991-12/1996

10 E 12/1986-12/1988 11 09/1986-12/1997 14 06/1988-12/1989

14 12/1986-12/1988 11 12/1986-04/1994 14 4x4 08/1991-12/1996

14 01/1988-12/1992 11 12/1986-04/1994 14 (ZA) 04/1987-04/1997

11 Cat (ZA_) 09/1988-12/1989 1.4 GTi 08/1991-12/1996

1.4 GTi 06/1991-12/1996 1.4 GTi 06/1991-12/1992 10 09/1986-06/1992

1.4 Allure 08/1992-04/1994 1.4 4x4 08/1992-04/1994

14 GT 01/1989-12/1991 14 01/1989-12/1991 10 02/1987-12/1998

11 4x4 06/1991-07/1992

## C15 Box Body/MPV (VD_)

1.4 i 05/1991-12/1996 1.1 i 07/1988-12/1996 1.4 i 05/1991-12/1996

1.4 07/1987-12/1996 1.4 E 07/1987-12/1996 1.1 11/1988-07/1996

1.4 E 05/1987-12/1996 1.0 10/1984-12/1997 1.0 10/1984-12/1997

1.0 10/1984-12/1997

## BX (XB-_)

14 01/1989-02/1993 14 01/1989-02/1993 11 10/1988-06/1992

14 10/1982-01/1992 14 10/1982-01/1992 14 10/1982-01/1992

14 E 04/1983-02/1993 14 E 09/1985-02/1993 14 E 10/1982-06/1988

14 E 04/1983-07/1989 14 E 04/1983-07/1989 14 E 10/1985-05/1989

14 01/1989-12/1989

## SAXO (S0, S1)

1.6 VTS 09/2000-09/2003 1.0 X 05/1996-11/1998 1.1 X, SX 05/1996-09/2003

1.4 VTS 05/1996-06/2003 1.6 VTL, VTR 05/1996-06/2003

1.6 VTS 06/1996-09/2003 1.4 VTS 05/1996-06/2003

1.1 X, SX 05/1996-09/2003 1.0 X 05/1998-06/2003 1.6 02/2001-04/2004

1.6 02/1996-06/2003 1.6 02/1996-04/2004 1.1 BiFuel 07/2000-06/2003

## BX Break (XB-_)

1.4 01/1987-01/1992 1.4 01/1987-01/1992 1.4 01/1987-01/1992

14 01/1989-02/1993 14 01/1986-02/1993 14 01/1989-12/1989

## C15 Estate

1.1 08/1988-07/1996 1.4 05/1991-07/1996 1.4 05/1987-09/1992

1.1 10/1988-10/1992

## SAXO Hatchback van (S3_)

1.0 10/1997-06/2003 1.0 08/1999-06/2003

## ZX Hatchback Van (N2)

1.4 07/1994-12/1995

## XSARA Estate Van

1.4 09/2000-03/2005

## BX Van (XB-_)

1.4 09/1982-01/1992

## ZX Break (N2)

1.6 i 10/1993-10/1997 1.4 i 10/1993-10/1997 1.4 i 10/1993-10/1997

1.6 i 10/1993-10/1997 1.4 i 10/1993-10/1997

## ZX (N2)

1.6 i 03/1991-06/1997 1.6 i 03/1991-06/1997 1.4 i 03/1991-06/1997

1.4 i 03/1991-06/1997 1.4 i 03/1991-06/1997 1.1 03/1991-06/1997

1.4 03/1991-06/1997 1.1 03/1991-08/1993 1.1 03/1991-08/1993

## XSARA Hatchback Van (N3_)

1.4 05/1998-10/2004 1.4 LPG 06/1999-08/2000

## PEUGEOT

### 308 I (4A_, 4C_)

1.6 BioFlex 04/2008-10/2014 1.6 16V 09/2007-10/2014

1.6 16V 09/2007-10/2014 1.6 16V 09/2007-10/2014

### PARTNER MPV (5_, G_)

1.8 05/1997-12/2002 1.6 16V 07/2001-03/2008 1.4 11/2002-10/2006

1.4 06/1996-12/2015 1.4 06/1996-12/2015 1.4 06/1996-12/2015

1.1 06/1996-10/2002 1.1 06/1996-10/2002

### 206+ (2L_, 2M_)

1.4 i 09/2010-06/2013 1.4 i (2LKFWA, 2MKFWA) 01/2009-08/2013

1.1 01/2009-06/2013

### 307 (3A/C)

1.4 08/2000-09/2003 1.6 07/2006-04/2012 2.0 16V 08/2000-06/2005

1.6 16V 08/2000-11/2007 1.4 16V 11/2003-07/2007

### 307 SW (3H)

1.6 16V 03/2002-04/2008 2.0 16V 03/2002-06/2005

1.4 16V 11/2003-07/2007 1.4 04/2002-09/2003

### 207 (WA_, WC_)

1.4 08/2008-12/2015 1.4 08/2008-12/2015 1.4 16V 02/2006-10/2013

1.6 16V 02/2006-10/2013 1.4 04/2006-10/2013 1.4 04/2006-10/2013

1.4 04/2006-10/2013 1.4 BiFuel 08/2007-12/2013

### 206 SW (2E/K)

1.4 16V 10/2003 1.4 07/2002-02/2007 1.6 16V 07/2002

1.4 07/2002-02/2007 1.1 07/2002-02/2007 1.4 LPG 07/2002-02/2007

## 1007 (KM_)

1.4 04/2005 1.4 04/2005 1.6 16V 04/2005 1.4 16V 10/2005

## PARTNER Box Body/MPV (5_, G_)

1.4 CNG 04/2003-10/2006 1.6 09/2000-10/2002 1.8 03/1997-08/2000

1.4 10/2005-12/2010 1.4 BiFuel 04/2003-10/2006 1.4 06/1996-12/2015

1.4 06/1996-12/2015 1.4 06/1996-12/2015 1.1 06/1996-09/2005

## 307 CC (3B)

1.6 16V 03/2003-04/2009

## 307 Break (3E)

2.0 03/2002-06/2005 1.4 16V 11/2003-07/2007 1.6 16V 03/2002-04/2008

1.4 04/2002-09/2003

## 206 Hatchback (2A/C)

1.4 16V 10/2003-02/2008 1.4 LPG 05/2006-09/2007 1.4 i 09/1998-12/2012

1.4 i 09/1998-12/2012 1.6 i 09/1998-12/2000 1.1 i 09/1998-02/2007

1.1 i 09/1998-02/2007 1.4 i 09/1998-12/2012 1.6 16V 07/2000-04/2009

1.1 08/1998-07/2000 1.6 16V 06/2001-04/2009 1.6 8V 05/1999-10/2003

1.6 BiFuel 07/2000-04/2009

## PARTNER Box Body/MPV

1.6 04/2008 1.6 04/2008

## BIPPER (AA_)

1.4 02/2008 1.4 02/2008

## 207 SW (WK_)

1.4 06/2007-12/2012 1.4 06/2007-12/2012 1.4 LPG 08/2007-12/2012

## PARTNER TEPEE

1.6 VTi 04/2008 1.6 VTi 04/2008

## BIPPER TEPEE

1.4 04/2008 1.4 04/2008

## 301

1.6 VTi 115 11/2012-10/2017

## 405 II Break (4E)

1.6 08/1992-10/1996 1.4 08/1992-10/1996 1.4 07/1993-06/1994

2.0 08/1992-10/1996

## PARTNER Platform/Chassis (5_, G_)

1.6 09/2000-05/2008

## PARTNER ORIGIN Box Body/MPV (G_)

1.4 08/2008-12/2015 1.6 09/2011-12/2015

## PARTNER ORIGIN MPV (G_)

1.4 07/2008-12/2013

## 106 II (1A_, 1C_)

1.6 S16 05/1996-07/2004 1.6 i 05/1996-01/2001 1.0 i 05/1996-10/1999

1.6 i 05/1996-10/1999 1.6 i 05/1996-01/2001 1.4 i 05/1996-07/2004

1.4 i 05/1996-07/2004 1.4 i 05/1996-07/2004 1.1 i 05/1996-07/2004

1.1 i 05/1996-07/2004 1.0 i 04/1996-03/2001 1.1 i 01/1997-03/2001

## 309 I (10C, 10A)

1.4 03/1989-07/1989 1.4 03/1989-07/1989 1.4 03/1989-07/1989

1.4 08/1988-08/1989

## 205 I Convertible (741B, 20D)

1.4 CJ 05/1991-12/1994 1.1 CJ 10/1989-12/1994 1.4 CJ 05/1991-12/1994

1.4 CJ 03/1989-12/1994 1.4 CJ Cat 01/1989-09/1993 1.1 08/1987-12/1994

1.4 08/1987-07/1990

## 309 II (3C, 3A)

1.4 07/1989-12/1993 1.1 08/1990-12/1993 1.4 07/1989-12/1993

1.4 07/1990-12/1993 1.1 09/1989-10/1993

## 205 II (20A/C)

1.4 Cat 08/1987-09/1993 1.4 10/1987-10/1990 1.1 10/1987-07/1992

1.4 06/1987-12/1989 1.4 07/1988-09/1998 1.4 07/1988-09/1998

1.4 07/1988-09/1998 1.4 07/1988-09/1998 1.4 08/1990-07/1992

1.0 08/1992-05/1997 1.1 07/1989-09/1998 1.0 10/1987-09/1998

1.4 07/1988-09/1998 1.3 Rallye 10/1987-10/1990

## 306 (7B, N3, N5)

1.1 06/1994-05/2001 1.4 SL 06/1994-05/2001 1.4 SL 06/1994-05/2001

1.6 SR 06/1994-10/2000 1.4 SL 06/1994-05/2001 1.6 10/2000-05/2001

## 405 I (15B)

1.4 01/1987-07/1992 1.4 06/1987-07/1992

## 405 I Break (15E)

1.4 05/1988-07/1992

## 205 Hatchback Van

1.1 08/1987-07/1990 1.1 08/1990-05/1997 1.0 08/1990-04/1995

1.4 02/1983-07/1987

## 405 II (4B)

1.4 08/1992-06/1994 2.0 08/1992-10/1995 1.4 08/1992-10/1995

## 106 I (1A, 1C)

1.4 08/1991-03/1996 1.0 09/1991-04/1996 1.6 11/1994-04/1996

1.3 10/1993-04/1996 1.4 09/1991-04/1996 1.4 Le Mans 09/1991-11/1994

1.0 09/1991-04/1996 1.4 09/1991-04/1996 1.6 06/1993-04/1996

1.1 09/1991-04/1996 1.0 09/1991-04/1996 1.4 08/1991-03/1996

## 306 Estate Van (N_, 7_)

1.4 03/1996-07/2001

## 309 Hatchback Van (10S, 3S)

1.1 09/1989-10/1993 1.4 09/1989-10/1993 1.4 09/1989-10/1993

## 306 Hatchback Van

1.4 03/1996-07/2001 1.1 07/1993-12/1994

## 205 I (741A/C)

1.4 02/1983-10/1987 1.4 02/1983-10/1987

## 306 Hatchback (7A, 7C, N3, N5)

1.4 04/1993-07/2001 1.4 04/1993-07/2001 1.6 05/1993-10/2000

1.1 05/1993-05/2001 1.4 04/1993-07/2001 1.6 10/2000-05/2001

## 306 Convertible (7D, N3, N5)

1.6 04/1996-10/2000 1.6 10/2000-04/2002

## 306 Break (7E, N3, N5)

1.4 03/1997-04/2002 1.6 03/1997-10/2000 1.4 03/1997-04/2002

1.6 10/2000-04/2002

## 106 Van II Hatchback Van (1S_)

1.0 04/1996-03/2001 1.0 04/1996-03/2001

## 206 CC (2D)

1.6 16V (2DNFUF, 2DNFUR) 09/2000-12/2007 1.6 09/2001-12/2008

## 308 SW I (4E_, 4H_)

1.6 16V 09/2007-10/2014 1.6 16V 09/2007-10/2014

## 308 CC (4B_)

1.6 16V 06/2009-12/2014 1.6 16V 06/2009-12/2014

## 206 Saloon

1.4 03/2007 1.6 16V 03/2007 1.4 03/2007

## 206 Van

1.1 09/2002-02/2007

## 106 Van I Hatchback Van (1S_)

1.0 08/1991-03/1996 1.0 08/1991-03/1996