SINTLY

SINTLY | STARTER MOTOR

XTLSTR7286

VOLTAGE 12 V

POWER 4.00 kW

APPLICATIONS ABG, AGCO, ATLAS, ATLAS COPCO, BELARUS, BOBCAT, BOMAG, BRAEU.T....

DIMENSIONS

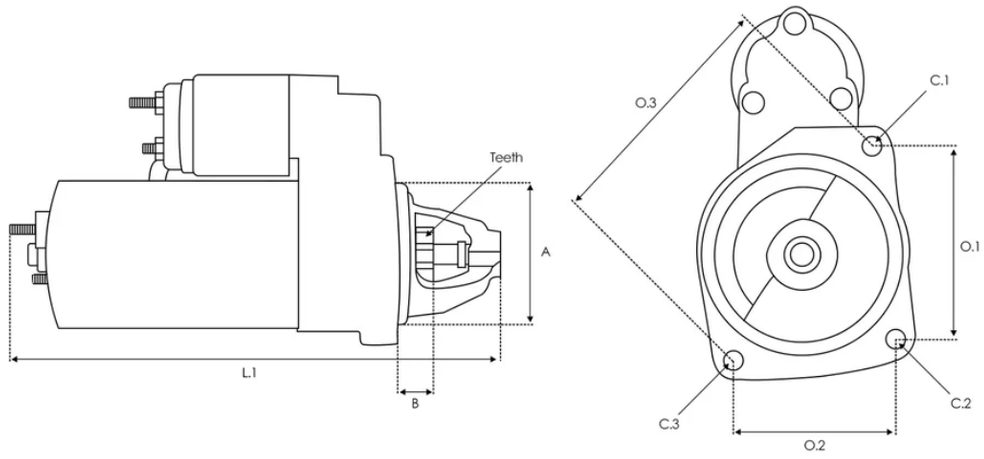

A 89.00 mm B 28.00 mm Teeth 9 qty. L.1 321.00 mm O.1 127.00 mm O.2 90.00 mm O.3 90.00 mm C.1 11.00 mm C.2 11.00 mm C.3 11.00 mm

OE 编号

BOMAG	05712909

替代编码

AS-PL	S9236 UD11321S
BMW	12417754662

BOMAG	05719269 5719269
BOSCH	0001230006 0001230014
CARGO	116093 F032116093
CASCO	CST21151 CST21151AS CST21151ES CST21151GS CST21151OS CST21151RS
CEVAM	8260
CLARK	6005025776
CUMMINS	5263797
DELCO	19083012 DRS0934 DS2044
DEUTZ	01181976
DIXIE	273-42106 TS-6266
ELECTROLOG	STR79254
ELSTOCK	25-4187
FENDT	F716900060010 F716900060060
ISKRA / LETRIKA	11.131.754 11.131.769 11.132.137 AZF4194 AZF4197 AZF4309 IS1254
KHD	01180928 01182233 01182925 01183120

	01183235 01183677 01183712 03045396 1180928 1181976 1182233
KRAMER	1000082774
LUCAS	LRS02515 LRS2515
MAHLE	MS 65
SAME	090021179
SANDO	6021151
SIDAT	S12ML0265A2
WAI	510.502.093.011 510.502.093.018 510.502.093.019 510.502.093.090 510.502.093.212 510.502.093.215 510.502.093.280 510.502.093.311 510.502.093.312 S133.233 S144.125
WOODAUTO	MAHMS65

适用车型

DEUTZ-FAHR

AGROTRON L

710 11/2011 730 11/2011 720 05/2008-12/2013

Series 6

6215 AGROTRON 02/2017 6205 AGROTRON 02/2017

6185 AGROTRON 02/2017 6165 AGROTRON 01/2016

6175.4 AGROTRON 02/2017

Series 5 C

5110 C 02/2013 5090 C 02/2013 5100 C 02/2013

AGROTRON TTV

430 01/2011-12/2014 410 01/2011-12/2014 630 01/2008-12/2008

420 01/2011-12/2013 1145 01/2001-12/2003 1160 01/2001-12/2003

1145 01/2001-12/2003 1160 01/2001-12/2003 1130 01/2001-12/2003

1130 01/2001-12/2003 610 01/2007-12/2012 620 01/2007-12/2008

Series 5

5130, 5130 TTV 02/2013 5110, 5110 TTV 02/2013

AGROTRON X

710 01/2006 720 01/2006 730 01/2011-12/2013

AGROTRON M

650 01/2007-12/2013 610 05/2009-12/2012 620 09/2007-12/2012

600 09/2007-12/2009 640 01/2007-12/2013 610 09/2007-12/2009

625 01/2007-12/2013 615 05/2009-12/2012 420 05/2009-12/2012

410 05/2009-12/2012 600 05/2009-12/2012

AGROTRON

180.7 01/2006-12/2007 200 MK3 01/2001-12/2003

150 MK2 01/1997-12/2001 6.05 MK1 01/1995-12/1997

90 MK3 01/2001-12/2003 200 MK2 01/1997-12/2001

110 MK3 01/2001-12/2003 6.15 MK1 01/1995-12/1997

100 MK3 01/2001-12/2003

6.30 MK1 01/1995-12/1997

150 MK3 01/2001-12/2003

135 MK3 01/2001-12/2003

115 MK3 01/2001-12/2003

260 MK3 01/2001-12/2003

85 MK3 01/2001-12/2003

120 MK2 01/1997-12/2001

260 MK2 01/1998-12/2001

265 01/2003-12/2007

4.70 MK1 01/1995-12/1997

6.00 MK1 01/1995-12/1997

80 MK3 01/2001-12/2003

205 MK3 01/2002-12/2003

175 MK2 01/1997-12/2001

165 MK3 01/2001-12/2003

100 MK2 01/1997-12/2001

6.45 MK1 01/1995-12/1997

4.95 MK1 01/1995-12/1997

106 MK3 01/2001-12/2003

85 MK2 01/1997-12/2001

80 MK2 01/1997-12/2001

135 MK2 01/1997-12/2001

160 MK2 01/1997-12/2001

106 MK2 01/1997-12/2001

4.85 MK1 01/1995-12/1997

230 MK2 01/1998-12/2001

215 01/2004

90 MK2 01/1997-12/2001

175 MK3 01/2001-12/2004

105 MK2 01/1997-12/2001

120 MK3 01/2001-12/2003

230 MK3 01/2001-12/2003

210 01/2003-12/2004

6.20 MK1 01/1995-12/1997

110 MK2 01/1997-12/2001

105 MK3 01/2001-12/2004

115 MK2 01/1997-12/2001

235 01/2003-12/2004

4.90 MK1 01/1995-12/1997

200 01/2004-12/2007

6.01 MK1 01/1995-12/1997

118 01/2003-12/2004

90 12/2003-12/2005

150 01/2005-12/2007

165 01/2003-12/2004

130.6 01/2005-12/2007

150.7 01/2005-12/2007

108 01/2004-12/2005

160 MK3 05/2001-12/2003

100 01/2004-12/2005 120 01/2005-12/2007 130 01/2003-12/2004

110 01/2004-12/2005 195 MK2 05/1997-12/2001 140 01/2003-12/2004

155 01/2003-12/2004 156 01/1998-12/2000 128 01/2004-12/2005

165.7 01/2005-12/2007 4.80 MK1 01/1995-12/1997 80 01/2004-12/2004

F6L914

6.5

F3L914

3.2

DX 160

6.1 05/1978-10/1985

Engine

3.2 4.8 6.5 3.2 6.1 01/1973-12/1975 2.1 2.1 4.3 3.2

4.8 7.2

DX 145

6.1 07/1980-10/1985

DX 140

6.1 05/1978-10/1985

F4L914

4.3

F5L914

5.4

AGROFARM

420, 430 01/2010 410 01/2010

AGROTRON K

610 01/2008-12/2014 430 01/2008-12/2014 420 01/2008-12/2014

120 09/2005-12/2007 100 09/2005-12/2007 90 09/2005-12/2007

410 01/2008-12/2014 110 09/2005-12/2007

D07

D6907A 01/1980 D6007 01/1980 D7807 01/1981-12/1984

D4007 01/1980 D6507A 01/1982-12/1984 D2807 01/1982

D4507A 01/1980 D4807A 01/1980 D6507 01/1982-12/1984

D6807 01/1980-12/1982 D5207A 01/1980 D6207 01/1980-12/1984

D6807A 01/1980-12/1982 D7207A 01/1981-12/1984

D6207A 01/1980-12/1984 D7807A 01/1981-12/1984 D4807 01/1980

D7207 01/1981-12/1984 D4507 01/1980 D5207 01/1980

D3607 01/1982 D6007A 01/1980 D7007 01/1980

DX

8.30 01/1983-12/1988 3.65 01/1988-12/1995 8.30 01/1983-12/1988

85 01/1978-12/1982 160 01/1978 140 01/1978 90 01/1978-12/1982

3.75 01/1993-12/1995 145 01/1980 3.80 01/1985-12/1990

4.70 01/1983 92 01/1982 80 01/1982 86 01/1982

6.05 01/1987-12/1991 3.70 01/1985-12/1989 120 01/1980

6.10 01/1983 3.10 01/1984-12/1990 6.50 01/1983 110 01/1978

3.90 01/1985-12/1989 3.60 01/1986-12/1995 4.50 01/1983

3.50 01/1984 3.30 01/1978-12/1995 4.30 01/1983

7.10 01/1984-12/1989 6.30 01/1983 4.10 01/1985

AGROPLUS

60 A 01/2004-12/2005
95 A 01/1998-12/2004
100 A 01/1998-12/2004
75 A 01/1998-12/2004
70 A 01/2004-12/2005
85 A 01/1998-12/2004
80 A 01/2000-12/2004
70 A 01/1996-12/2004
60 A 01/1996-12/2004
80 A 01/2004-12/2004

AGROSTAR

DX 6.21 01/1991-12/1993
DX 6.08 01/1993-12/1995
DX 4.68 01/1993-12/1993
DX 6.28 01/1993-12/1995
DX 4.61 01/1990-12/1993
DX 6.11 01/1990-12/1993
DX 4.71 01/1990-12/1993
DX 6.71 01/1992-12/1997
DX 6.08 01/1990-12/1993
DX 6.61 01/1990-12/1995
DX 4.78 01/1993-12/1993
DX 6.31 01/1993-12/1996
DX 6.38 01/1990-12/1993

D06

D10006 01/1970
D7006A 01/1974-12/1981
D5006 01/1968-12/1974
D7006 01/1974-12/1981
D6206A, D6206SA 01/1974-12/1981
D6806A 01/1974-12/1981
D6206, D6206S 01/1974-12/1981
D2506 01/1968
D5206 01/1974-12/1981
D5506 01/1969-12/1975
D8006 01/1970
D6806 01/1974-12/1981
D10006A 01/1970
D6006 01/1968
D5206A 01/1974-12/1981
D4506, D4506S 01/1968-12/1982
D7206A 01/1974-12/1981
D7206 01/1974-12/1981
D4006, D4006P 01/1968-12/1982

AGROXTRA

DX 6.07 01/1991-12/1995 DX 3.57 01/1991-12/1995

DX 6.17 01/1991-12/1995 DX 4.57 01/1991-12/1995

DX 4.07 01/1991-12/1995 DX 4.17 01/1991-12/1995

DX 4.47 01/1993-12/1995

AGROPRIMA

DX 6.16 01/1991-12/1995 DX 4.56 01/1991-12/1995

DX 4.51 01/1989-12/1995 DX 6.06 01/1990-12/1995

DX 4.31 01/1989-12/1995

AGROLUX

60 01/2001-12/2006 90 01/2000-12/2008 80 01/2000-12/2008

70 01/2001-12/2006

SAME

EXPLORER

100 10/2009 85 10/2009 110 03/2009-12/2013

Iron 180.7

7.2 7.2

Iron 150.7

7.2

Iron 200

7.2

Iron 165.7

7.2

Iron 140S

7.2 01/2003-12/2005

Frutteto 3 110

4.1 01/2008

FENDT

Vario

516 07/2012 514 07/2012 512, 513 07/2012

Farmer

250 S, 250 V 01/1987 201 S 01/1975 275 S, 275 V 01/1988-12/1996

270 PA, 270 VA 01/1988-12/1996 208 FA, 208 PA, 208 VA 01/2003

307 C 01/1997 308 CA 01/1997 306 LSA 01/1987-12/1993

270 P, 270 V 01/1988-12/1996 306 LS 01/1987-12/1993 205 PA 01/1983

207 F, 207 V 01/2003 303 LS 01/1982 207 FA, 207 VA 01/2003

206 F, 206 V 01/2003 240 S 01/1987-12/1993 307 CA 01/1997

205 P 01/1983 206 FA, 206 VA 01/2003 275 SA, 275 VA 01/1988-12/1996

308 C 01/1997 305 LS 01/1987-12/1993 305 LSA 01/1987-12/1993

250 SA, 250 VA 01/1987 309 Ci 01/2003-12/2008 208 S, 209 S 01/2003

307 Ci 01/2003-12/2008 308 Ci 01/2003-12/2008 312 01/1993-12/2001

206 S, 207 S 01/2003 410 Vario, 411 Vario 01/1999-12/2006

409 Vario 01/2003 412 Vario 01/1999-12/2006 200 SA, 200 VA 01/1974

204 P, 204 V 01/1974 2 D 01/1968 260 P, 260 S, 260 V 01/1987-12/1996

280 PA 01/1996 200 S, 200 V 01/1974 201 SA 01/1975

203 P, 203 V 01/1974-12/1987 203 PA, 203 VA 01/1974-12/1987

260 PA, 260 SA, 260 VA 01/1987-12/1996 280 P 01/1996

204 PA, 204 VA 01/1974 303 LSA 01/1982 309 CA 01/1997

309 01/1993-12/2001 309 LSA 01/1981-12/1998 280 S 01/1996-12/2003

GT

345 GT 01/1984-12/1996 380 GT 01/1984 365 GTA 01/1985-12/1996

275 GT 01/1976 390 GTA 01/1985-12/1995 395 GTA 01/1989-12/1998

370 GTA 01/1998-12/2004 360 GT 01/1984-12/1996 380 GTA 01/1998

370 GT 01/1998-12/2004 255 GT 01/1976 350 GT 01/1996

Favorit

716 Vario 01/2006 614 SA 01/1974-12/1976 714 Vario 01/2006

711 Vario, 712 Vario 01/2006

HURLIMANN

XM.100

3.6 01/2013 4.0

XM Max 100

4.0

XM Max 85

4.0

XM.110

6.0 3.6 01/2013

XM.120

4.0 3.6 01/2013

HAMM

HD+ 90 VT S

4.0

HD+ 120 VV HV

4.0

3414 HT

4.0

3520 HT

6.1

3516

6.1

HD 90

4.0

HD+ 90 VO S

4.0

3410

4.0 4.0

HD+ 90 VV

4.0

3412 HT

4.0

3410 P

4.0 4.0

GRW 21

4.0

GRW 280-28

4.0

HD 110

4.0

HD+ 110 VV HV

4.0

GRW 280-20

4.0

GRW 15

4.0 5.7 08/1978-06/1986

DV 90 TV

4.0

3411

4.0 4.0

GRW 280-16

4.0

3520 HT P

6.1

HD+ 90 VT

4.0

HD 110 K

4.0

DV 85 VO

4.0

3412 VIO

4.0

DV 85 TO

4.0

3625 HT

6.1

DV 65 TV

4.0

HD+ 120 VO

4.0

DV 65 TO

4.0

DV 70 VO

4.0

3412

4.0

HD+ 100 VV

4.0

3414 HT P

4.0

3518

6.1

DV 90 TO

4.0

3516 HT

6.1

HD+ 120 VV

4.0

DV 65 VO

4.0

GRW 24

4.0

3412 HT VIO

4.0

3414 VIO

4.0

HD 90K

4.0

GRW 280-28L

4.0

GRW 10

4.0 5.7 08/1978-12/1991

3411 P

4.0 4.0

HD+ 90 VV HV

4.0

DV 70 TO

4.0

HD+ 90 VV S

4.0

3414

4.0

DV 90 VO

4.0

GRW 18

4.0

3518 HT P

6.1

HD+ 140 VV

4.0

HD+ 110 VO

4.0

3518 P

6.1

GRW 280-12H

4.0

HD+ 110 VT

4.0

DV 70 VV

4.0

GRW 280-10

4.0

DV 65 VV

4.0 4.0

HD+ 90 VO

4.0

HD O90 V

4.0

3516 P

6.1

3518 HT

6.1

3516 HT P

6.1

DV 85 TV

4.0

3520

6.1

DV 90 VV

4.0

3520 P

6.1

DV 85 VV

4.0 4.0

GRW 280-24

4.0

3412 HT P

4.0

HD+ 140 VO

4.0

3414 HT VIO

4.0

HD+ 140 VV HV

4.0

GRW 280-12

4.0

3414 P

4.0

DV 70 TV

4.0

3412 P

4.0

DV 10-B

4.7 08/1978-12/1979

DV 10-C

4.7 01/1980-12/1991

BOMAG

BW 226 DI-4 BVC

4.8

BW 27 RH-41

4.1

BW 219 D-4

6.1

BW 211 PD-4

4.8

BW 216 PD-4

4.8

BW 213 D-4

4.8

BW 226 PHD-4

7.2

BW 216 PDH-4

6.1

BC 462 EB

7.2

BW 219 PDH-4

4.8

BW 214 PDH-4

4.8

BF 800 P S 600

6.1

BW 216 PD-40

4.8

BW 219 DH-4

4.8

BW 213 DH-4

4.8

BW 213 PDH-4

4.8

BW 214 DH-4

4.8

BW 203 AD-4 AM

4.0

BW 214 D-4

4.8

BW 332 DEEP IMP

7.2

BF 800 C S 500

6.1

BW 226 RC-4 BVC

6.1

BW 27 RH

4.0

BW 24 RH

4.0

BW 212 PD-40

4.0

BF 600 C HCE

4.8

BW 203 AD-4

4.0

BW 219 D-4I

6.1

BW 219 PD-4I

6.1

BW 213 DI-4

4.8

BW 190 AD-4

4.0

BW 219 PD-4

6.1

BW 211 D-4

4.8

BW 226 DH-4I

6.1

BW 332 DH-4 BVC

7.2

BW 213 DH-4 BVC

4.8

BW 226 DH-4

7.2

BW 216 D-4

4.8

BW 211 PD-40

4.0

BW 218 D-40

4.8

BF 600 P HCE

4.8

BW 213 PD-40

4.0

BW 213 DH-4/P

4.8

BW 190 AD-4 AM

4.0

BW 211 D-40

4.0

BW 212 D-40

4.0

BW 216 D-40

4.8

BW 226 DH-4I BVC

6.1

BW 213 DH-4 BVC/P

4.8

BW 216 DH-4

6.1

BW 202 AD-4

4.0

BF 600 C HSE

4.8

BW 213 D-40

4.0

BW 226 DH-4 BVC

6.1

BF 800 C S 600

6.1

BF 800 P S 500

6.1

BF 600 P HSE

4.8

BW 211 DH

3.6

BW 141 AC

3.7 01/1985

BF 700 C-2

6.1

BF 800 C-2

6.1

BF 600 C-2

6.1

BF 900 C S 500

6.1

BW 191 AD-50AM

4.0

BW 206 AD-5 AM

4.1

BW 213 BVC-5

4.1

BW 25 RH

4.0

BW 161 AD-50 AM

4.0

BW 161 AD

4.0

BW 202 AD-50

4.0

BW 191 ADO-5

4.1

BW 206 ADO-5

4.1

BW 206 AD-50AM

4.0

BW 161 AD-50

4.0

BW 211B

5.7 08/1978-06/1985

KHD

Engine

3.2 3.2 6.1 6.5 4.0 6.5 4.3 5.4 4.3 7.1 4.0 6.5

3.2 4.3 6.5 5.4 7.2

GREGOIRE

G6.200

3.6

G8.260

6.1

G8.270

6.1

G7.210

4.0

G6.210

3.6

G175

6.1

G7.240

4.0

SCHAFFER

9300 Z 9380 T 9630 T

900T

4.1 01/2005

930T

4.1 01/2005

MATROT

Sprayers Maestria 21-39

6.1

Sprayers Maestria 17-39

6.1

Sprayers Xenon Pro

6.1

Sprayers Maestria 21-40

6.1

Sprayers Maestria 17-40

6.1

Sprayers Maestria 23-45

6.1

Sprayers Helios

4.0

Sprayers Xenon

6.1

Sprayers Helios 36

4.0

Sprayers Expert

6.1

LAMBORGHINI

R6. T4i 180 01/2012

R3.E80 110

4.0

R3.T 85

4.0

R3.TB 100

4.0 4.0

R4. 100

4.0 01/2009

R6. T4i 190

6.1 01/2012

R4. VRT 100

4.0 01/2010

R6. 175

6.1

R3.TB 85

4.0 4.0

R8. 230

7.1

R3. 100 Evo

4.0

R3. 85 Evo

4.0

R6. 140

6.1

R6. VRT.150.7

7.1

R6. VRT.165.7

7.1

R4. VRT 110

4.0 01/2010

R6. 125

4.0

R6. 185

6.1

R7. 190

7.1

R6. T4i 160

6.1 01/2012

R7. 220

7.1

R3.E80 100

4.0

R3.E80 85

4.0

R6. T4i 160.4

4.0 01/2012

R6. T4i 150

6.1 01/2012

R6. T4i 150.4

4.0 01/2012

R6. 130

6.1

R8. 270

7.1

R7. 210

7.1

R6. 160

6.1

R3.T 100

4.0

R6. 115

6.1

R4. 110

4.0 01/2009

R6. 100

4.0 12/2007-01/0001

R6. 120

4.0 12/2007-01/0001

R6. 110

4.0 12/2007-01/0001

R6.140S

7.2 01/2003-12/2005

R8.265 Diamond

7.2 01/2004-12/2006

GEKO

130010

4.8

60010 ED-S/DEDA

4.0

85010 ED-S/DEDA

4.8

100010 ED-S/DEDA

4.8

85003 ED-S/DEDA

4.8

60003 ED-S/DEDA

4.0

100003 ED-S/DEDA

4.8

130003 ED-S/DEDA

4.8

40003 ED-S/DEDA

3.6

LINDE

H70D

4.0

H60D

4.0

H80D-1100

4.0

H50D

4.0

H80D-900

4.0

H80D

4.0

H 25D

2.8 05/1979-12/1980

KRAMER

3307

880

4.0 4.0

4009

4.0 4.0

Farm KL54

4.0

3307

4.0 4.0

4507

4.0 4.0 01/2008-12/2013

400 412 E

2.8 01/1982-09/1988

400 416 S

2.8 01/1981-09/1991 2.8 01/1992

312 SE

2.8 01/1982-08/1990

500 516

3.8 01/1979-01/1999

KL 54

4.0

400 412

2.8 01/1978-09/1981

ATLAS

AR 105 E 4.

AR 95 E Super

4.1

AW 1120

4.0

AR 105

4.1

AW 1110

4.0

AW 1140

4.0

AW 1130

4.0

AS 81

3.8 01/1980-12/1984

AT 710

3.8 08/1978-12/1978

AR 61A

1.9 01/1980-12/1984

AR 51BE

1.9 01/1980-12/1984

1202

2.8 08/1978-12/1978

1252

2.8 08/1978-12/1984

AR 70

3.8 08/1978-12/1984

HAULOTTE GROUP

HTL4017

4.0

HTL3617

4.0

HTL4014

4.0

MECALAC

714 MWR

4.0 01/2006

714MW E

4.0 01/2010

71M CE

4.0 01/2009

712 MC

4.0 01/2009

EUROMACCHINE

MP 12 DC

6.1

MP 05 DC

4.0

MP 08 DC

4.0

MP 07 DC

4.0

MP 11 DC

6.1

MP 06 DC

4.0

MP 10 DC

4.7

MP 09 DC

4.7

CLAAS

7055

4.0 4.0

Atles 935

7.2

Atles 946

7.2 01/2005

9055

4.0 4.0

Atles 926

7.2 01/2003

6030

3.6 3.6

7030

4.0

Atles 936

7.2 01/2003

9040

4.0

7040

4.0

7045

4.0

Mercator 75R

5.6 08/1978-08/1982

WACKER NEUSON

WL 50

3.6

WL 55

3.6

BELARUS

920.4-10/91

4.0

952.4-10/99

4.0

920.4-10/99

4.0

Series 100

920.3, 920.4, 922.3, 952.3, 952.4 01/2004 920, 952 05/1994

920.2, 952.2 05/1994 512, 512.2, 522, 612 01/1998 812, 912 01/2010

920.5, 920.6, 952.6 05/2011 820 01/2001 922.5, 922.6, 923.4 05/2011

510, 511, 511.1, 520, 611 01/1998 800 01/2001 811, 911 01/2010

Series 1000

1021.5, 1021.6 05/2013 1025.2 05/2000

BRAEUTIGAM

125-50 165-40 200-40 125-40 150-40

165-40

6.1

160-40

6.1

200-40

7.8

ATLAS COPCO

XAHS 186 C3

4.0

XAVS 166C3

4.0

XAHS 237

6.1

XAS 186 C3

4.0

XATS 156 C3

4.0

XAMS 287

6.1

XAHS 146 C3

4.0

XATS 156 C2

4.0

STS 71

5.6 02/1973-12/1986

STS 95

5.6 02/1973-12/1986

ST 71

5.6 02/1973-12/1986

XAS 186 C2

4.0

VSS 250

5.6 08/1969-12/1979

ST 95

5.6 03/1973-12/1986

STS 35

2.8 05/1979-12/1986

ST 48

3.8 05/1979-12/1986

STS 48

3.8 05/1979-12/1986

ST 35

2.8 05/1979-12/1986

WEIDEMANN

8080 CX120

4.0

MERLO

3513

P29.6

4.1 01/2007

SENNEBOGEN

608 R

4.0

SK Series 9

3.8 08/1978-06/1990

SK Series 15

5.7 08/1978-06/1990

S Series 883

2.8 08/1978-06/1990

HITTNER

Ecotrac 55

RIGITRAC

SKH 120

4.0

WEYCOR

AW 1130

4.0

AW 1140

4.0

AW 1110

4.0

ABG

WZ 172

3.8 08/1978-12/1979

WZ 172S

3.8 08/1978-12/1979

BV 590

3.8 08/1978-12/1979

MAW 172S

3.8 08/1978-12/1979

MAW 173S

3.8 08/1978-12/1979

Alexander 128

3.8 05/1980-12/1990

MAW 173

3.8 08/1978-12/1979

VAS 512

2.8 08/1978-12/1979

Puma 168

2.8 05/1980-12/1990

MAW 172

3.8 08/1978-12/1979

Puma 177 VS

5.7 08/1978-12/1990

Puma 178

5.7 08/1978-12/1990

Alexander 128G

3.8 08/1978-12/1990

Alexander 126H

2.8 08/1978-12/1990

Puma 177

5.7 08/1978-12/1990

Puma 168A

2.8 08/1978-12/1990

Puma 177 V

5.7 08/1978-12/1990

SCHWING

CP 2800 D

6.5

CP 1800 D

4.8

SP 2800 D

6.5

FAHR

M 2480

5.7 01/1979-12/1987

M 1322

6.1 01/1980-12/1987

M 1002

4.7 08/1978-12/1981 5.7 08/1978-01/1980

M 600

2.8 02/1979-12/1980

M 1202

5.7 02/1979-01/1980

M 1320

6.1 01/1980-12/1987

M 660

2.8 01/1980-12/1987

M 980

3.8 01/1981-12/1987

M 2780

6.1 01/1983-12/1987

M 1322 HA

6.1 06/1980-12/1987

M 770

3.8 01/1980-12/1987

M 2780 H

6.1 01/1983-12/1987

M 1300 H

6.1 01/1974-04/1976

M 900

3.8 08/1978-12/1979

M 1300

5.7 08/1978-12/1979

M 2685

6.1 01/1979-12/1987

M 2580

6.1 01/1979-12/1987

M 750

3.8 08/1978-12/1980

M 1322 H

6.1 01/1980-12/1987

M 1302 HHA

6.1 05/1976-12/1979

M 2680

6.1 01/1979-12/1987

M 922

3.8 02/1979-12/1981

CLAYSON

1520 1520

3.8 05/1979-12/1979

1530

5.7 05/1979-12/1979

1540

5.7 05/1979-12/1979

LIEBHERR

A901B

2.8 08/1978-12/1978

A911

3.8 08/1978-12/1978

A921

3.8 08/1978-12/1978

R921B

3.8 08/1978-08/1990

R911

3.8 08/1978-08/1982

VETUS

DTA64 DTA44 DT67 DTA66 D4.29 DT43 DT66 DT44 DT64

DTA67 DT4.29 D.429 DTA43

WL 50

3.6

WL 55

3.6

DT66

6.1 01/2002

DT44

4.1 01/2002

DT67

7.2

DT43

4.1

DTA64

4.8 01/2002

MAGIRUS-DEUTZ

M130

6.1 09/1975-12/1982

M160

6.1 09/1975-12/1982

INTERNATIONAL

3961 Yumbo 01/1973-08/1986

3960 Yumbo 07/1973-12/1986

3944

3.8 05/1973-12/1986

3945

3.8 05/1979-12/1986

JCB

409

3.6

PUTZMEISTER

TKB 60

4.0

TK 60

4.0

TK 50

4.0

SCHAEFF

HML 30

2.8 09/1982-12/1986

SKL 500

2.8 09/1978-12/1986

AGCO

9130 01/1991-12/1993 9150 01/1991-12/1993 R40 01/1988-12/1991

R42 01/1992-12/2000 R52 01/1992-12/2002 R50 01/1987-12/1991

BOBCAT

863HC 01/1996-12/1997 863C 01/1996-12/1997 863HF 01/1996-12/1999

863 01/1999-12/2003 863F 01/1997-12/1999 873C 01/1995-12/1997

SANDVIK

DS 310

INGERSOLL RAND

125 01/1992

CARRARO

ERGIT

TTR9800 01/2012 TRX6500 01/2012

VERMEER

V4150 01/1995 V4150A 01/1997

TEREX

737

4.1 01/2005

IVECO

MK

80-9 AH 01/1983-02/1986 80-9 A 01/1983-02/1986

110-16 AT 01/1983-12/1985 75-9 H 01/1983-08/1985

110-13 AH 01/1983-12/1985 110-13 AH 01/1983-12/1985

90-13 A 01/1983-12/1991 80-13 AT 01/1983-12/1991

80-13 A 01/1983-12/1991 130-13 AH 01/1983-12/1991

75-9 A 01/1983-05/1989 80-13 AW 01/1983-12/1989

80-13 AT 01/1983-12/1991 75-9 A 01/1983-05/1989

80-13 AW 01/1983-12/1989 110-16 A 01/1983-12/1991

80-13 AH 01/1983-12/1991 80-16 AW 01/1986-12/1989

80-13 A 01/1983-12/1991 130-16 A 01/1983-12/1991

130-16 AH 01/1983-12/1991 80-16 A 01/1983-12/1991

80-13 AW 01/1983-12/1991 110-16 AH 01/1983-12/1991

130-13 A 01/1983-12/1991 80-13 AW 01/1983-12/1991

80-13 AH 01/1983-12/1991 130-13 A 01/1983-12/1991

110-13 A 01/1983-12/1991 130-13 AH 01/1983-12/1991

90-13 AH 01/1983-12/1991 110-13 A 01/1983-12/1991

VOLVO

NH12

NH 12/380 05/1999 NH 12/420 05/1999